TOYOTA atHOME

"TOYOTA" Sewing & Knitting Machines by AISIN, a Member of The TOYOTA Group.

INSTRUCTION BOOK

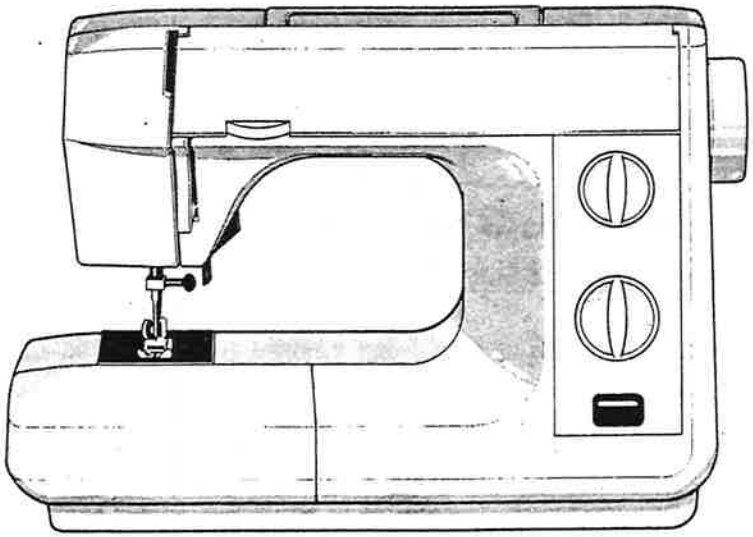

Model 4081

A STITCH AHEAD OF THE TIMES

TOYOTA

sewing machines

IMPORTANT **PLEASE READ CAREFULLY**

The wires in this mains lead are coloured
in accordance with the following code:

BLUE-NEUTRAL **BROWN-LIVE (OR ACTIVE)**

As the colours of the mains lead of this appliance may not correspond with the coloured markings identifying the terminals in your plug — PROCEED AS FOLLOWS: The earth plug pin is unnecessary. As the Machine is designed under double insulation structure, the earth wire is removed from the machine. The wire coloured BROWN must be connected to the terminal marked L or A or coloured RED.
The wire coloured BLUE must be connected to the terminal marked N or coloured BLACK. Neither core is to be connected to the earth terminal of a three-pin plug.

When leaving the machine or when servicing or changing mechanical parts or accessories, the machine must be disconnected from the supply by removing the plug from the socket outlet.

MAXIMUM INPUT OF LAMP: 15 WATTS

THIS APPLIANCE (U.K. SPECIFICATIONS) COMPLIES WITH BS 800 STANDARD

Please retain the packagings to protect your machine in transit for the possible return of repairs in the future.

IMPORTANT SAFETY INSTRUCTIONS

When using an electrical appliance, basic safety precautions should always be followed, including the following:

Read all instructions before using (this appliance).

DANGER--To reduce the risk of electric shock:

An appliance should never be left unattended when plugged in. Always unplug this appliance from the electric outlet immediately after using and before cleaning.

WARNING--To reduce the risk of burns, fire, electric shock, or injury to persons:

1. Do not allow to be used as a toy. Close attention is necessary when this appliance is used by or near children.
2. Use this appliance only for its intended use as described in this manual. Use only attachments recommended by the manufacturer as contained in this manual.
3. Never operate this appliance if it has a damaged cord or plug, if it is not working properly, if it has been dropped or damaged, or dropped into water. Return the appliance to the nearest authorized dealer or service center for examination, repair, electrical or mechanical adjustment.
4. Never operate the appliance with any air openings blocked, Keep ventilation openings of the sewing machine and foot controller free from the accumulation of lint, dust, and loose cloth.
5. Never drop or insert any object into any opening.
6. Do not use outdoors.
7. Do not operate where aerosol (spray) products are being used or where oxygen is being administered.
8. To disconnect, turn all controls to the off ("0") position, then remove plug from outlet.
9. Do not unplug by pulling on cord. To unplug, grasp the plug, not the cord.

DANGER

1. Always unplug before relamping. Replace bulb with same type rated 15 watts.
2. Do not reach for an appliance that has fallen into water. Unplug immediately.
3. Do not place or store appliance where it can fall or be pulled into a tub or sink. Do not place in or drop into water or other liquid.

WARNING

1. Keep fingers away from all moving parts. Special care is required around the sewing machine needle.
2. Always use the proper needle plate. The wrong plate can cause the needle to break.
3. Do not use bent needles.
4. Do not pull or push fabric while stitching. It may deflect the needle causing it to break.
5. Switch the sewing machine off ("0") when making any adjustments in the needle area, such as threading needle, changing needle, threading bobbin, or changing presser foot, etc.
6. Always unplug sewing machine from the electrical outlet when removing covers, lubricating, or when making any other user servicing adjustments mentioned in the instruction manual.
7. Never operate on a soft surface such as a bed or couch where the air openings may be blocked.

SAVE THESE INSTRUCTIONS

CONTENTS

1. NAME OF PARTS 1
2. ACCESSORIES 2
3. BEFORE SEWING 3
   DETACHABLE EXTENSION TABLE 3
   CONNECTING FOOT CONTROLLER AND POWER CORD 4
   THREADING UPPER THREAD 5
   DRAWING UP LOWER THREAD 7
   TRIAL SEWING 8
   ADJUSTING THREAD TENSION 9
4. STARTING TO SEW 10
   BOBBIN WINDING 10
   INSERTING BOBBIN 12
   CHANGING FOOT 13
   CHANGING NEEDLE 14
   FABRIC, THREAD AND NEEDLE TABLE 15
   PATTERN SELECTION DIAL 16
   STITCH LENGTH DIAL 16
   TURNING A SQUARE CORNER 16
   REVERSE SEWING 17
   THICK FABRIC SEWING 18
   DOUBLE PRESSER FOOT LIFTER 18
5. SELECTING THE STITCH 19
   STRAIGHT SEWING 19
   ZIGZAG SEWING 19
      Thread Tension For Zigzag Stitch 19
   TWIN NEEDLE THREADING 20
   PIN TUCKING 21
   BLIND HEM STITCH 22
   OVERCASTING 24
   OVERLOCKING 25
   STRETCH STITCHING 26
   MAKING BUTTONHOLES 27
      Determine Length 27
      Cutting Buttonholes 29
   QUILTING 30
   ZIPPER SEWING 31
   MENDING 32
      Patching 32
      Mending a Rip 32
   SMOCCKING 33
   APPLIQUE WORK 34
   EMBROIDERY 35
      Darning Plate 36
      Removing Foot Holder 36
6. MAINTENANCE 37
   CLEANING 37
   OILING 37
7. TROUBLE CHART 38
   LOWER TENSION ADJUSTMENT 40
   CLEANING SHUTTLE CASE 42
   CHANGING LIGHT BULB 42

1. NAME OF PARTS

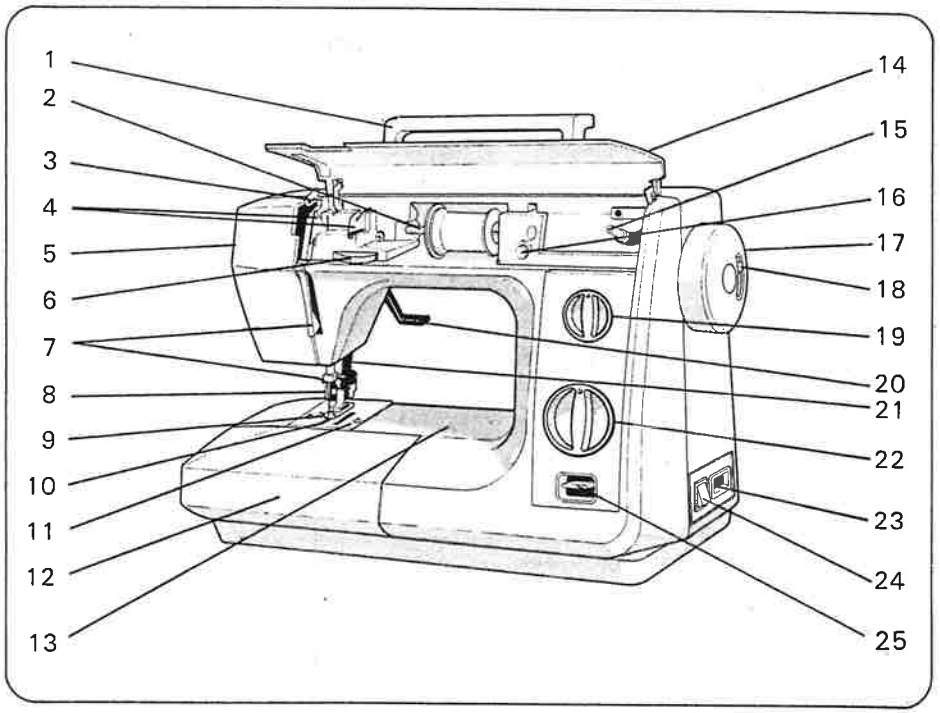

1. Handle
2. Spool pin
3. Take-up lever
4. Thread guide for bobbin winding
5. Face cover
6. Upper thread tension dial
7. Thread guide for upper threading
8. Presser foot thumb screw
9. Presser foot
10. Feed dog
11. Needle plate
12. Extension table (Accessory box)
13. Free arm
14. Top cover
15. Bobbin winding spindle
16. Thread guide for bobbin winding
17. Handwheel
18. Declutch knob
19. Stitch length dial
20. Presser foot lifter
21. Thread cutter
22. Pattern selection dial
23. Socket
24. Switch
25. Reverse sewing lever

2. ACCESSORIES

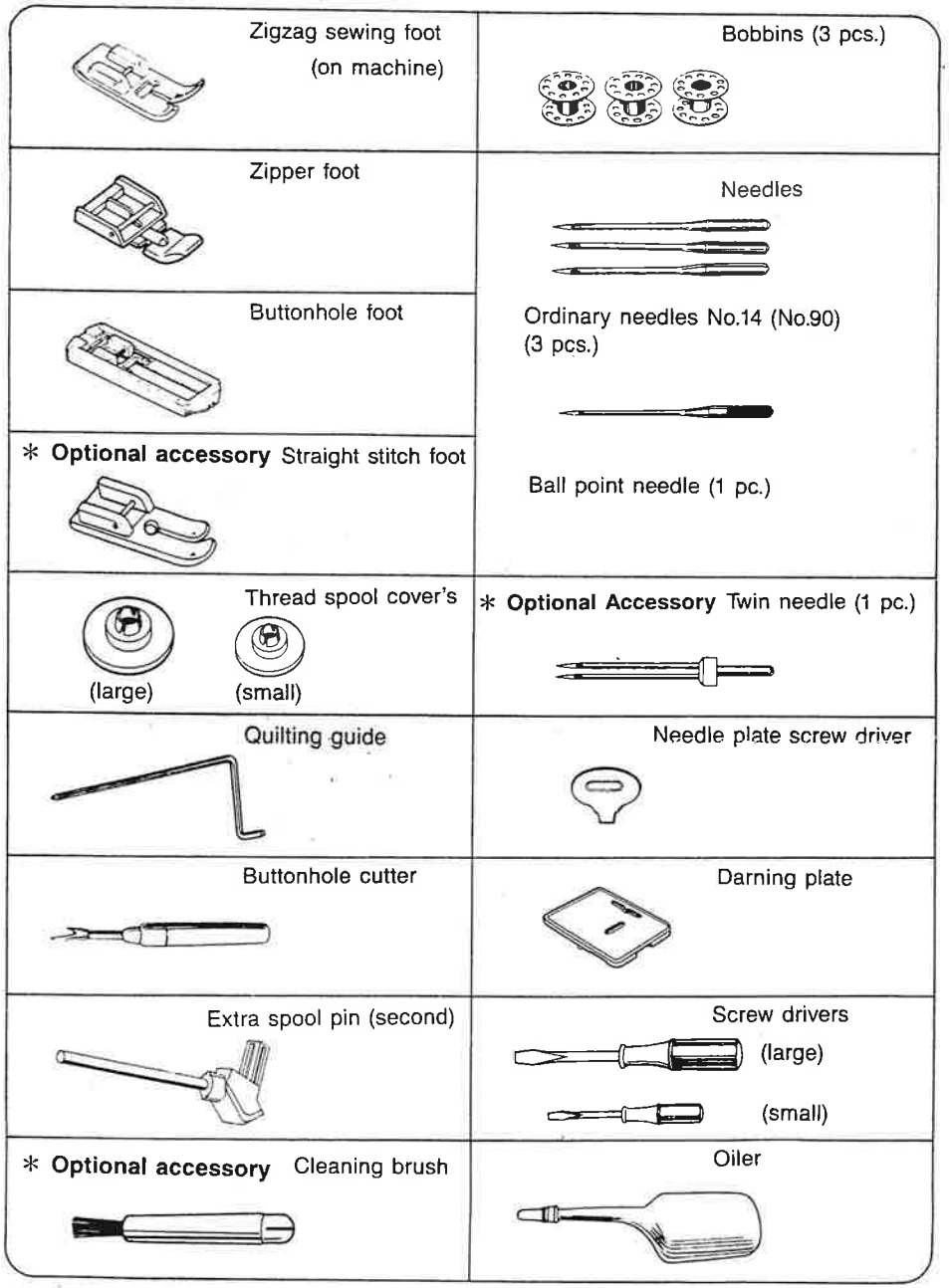

*** Accessories may differ from country to country.**

3. BEFORE SEWING

The machine is stored in flat-bed style which makes your work easier for ordinary sewing.

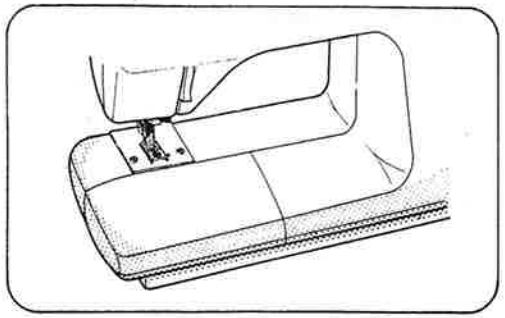

DETACHABLE EXTENSION TABLE

Remove the table (accessory box) off and the machine is used as a free-arm machine.

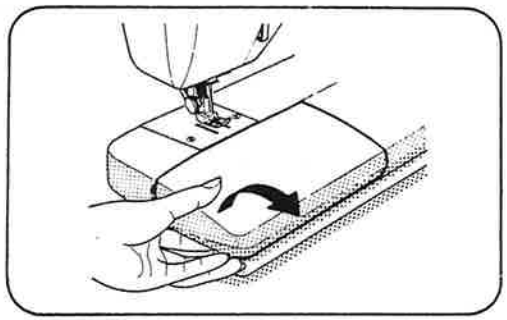

The free-arm is more convenient to sew or embroider; trousers, sleeves, cuffs of T-shirts, blouses, etc.

Reverse the above steps to attach the extension table.

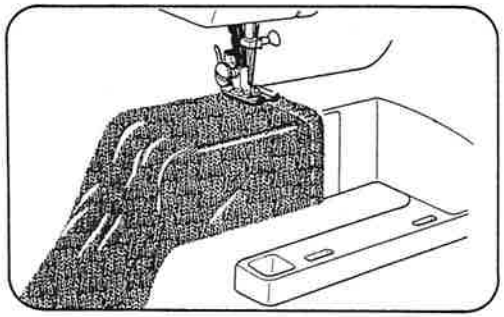

To open the lid of the accessory box, pull it open, as illustrated.

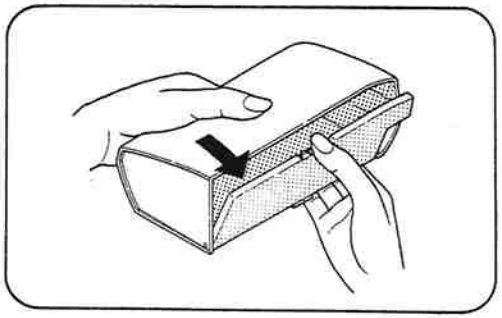

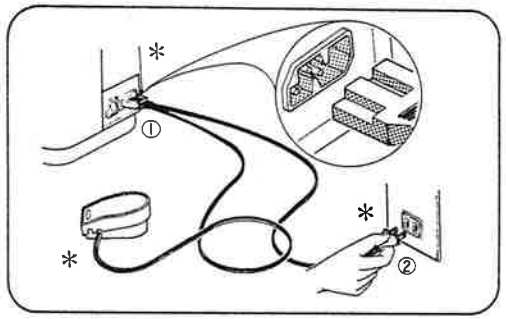

CONNECTING FOOT CONTROLLER AND POWER CORD

Connect foot controller and power cord ① ②.

Before plugging in your machine, be sure that the voltage is same as that of your machine. (written on a plate at back of machine)

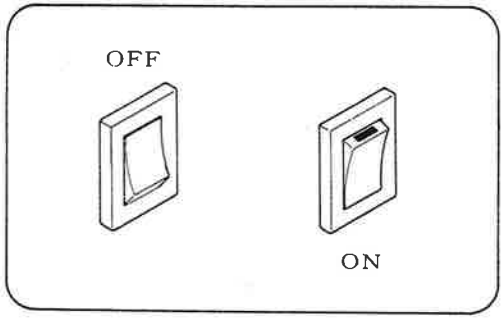

Switch on, power to the machine and turn on the sewing light.

Switch off, power off to the machine and turn off the sewing light.

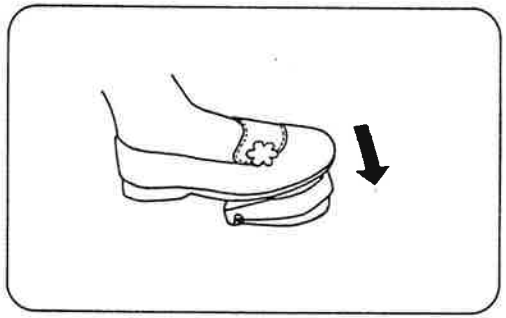

The more you press foot controller, the faster the machine runs.

* Specifications vary from country to country.

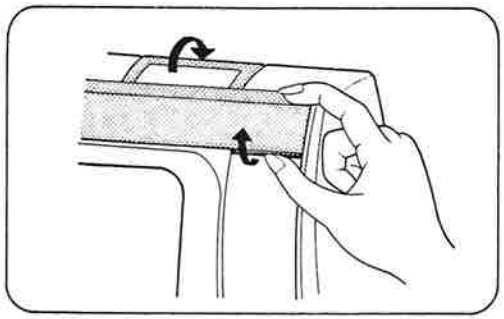

To open top cover

Press cover on top with index finger. Lift cover with thumb and flip open to full extended position. Lower carrying handle if necessary.

THREADING UPPER THREAD

1. Raise the presser foot up.
2. Set the take-up lever to the highest position by turning the handwheel towards you.
3. Fold the handle back and open top the cover.
4. Pull out the spool pin toward you and put a thread spool on it.

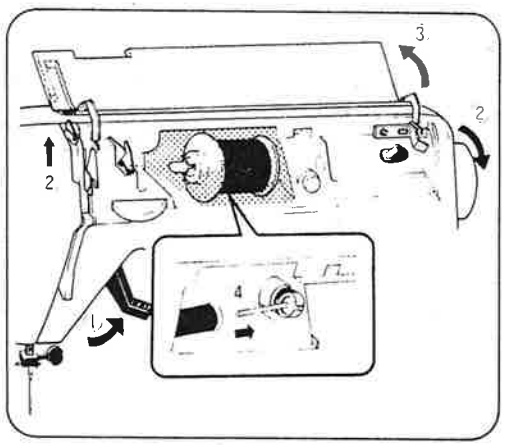

5. Place spool cover onto spool pin, as illustrated put it back to the original position.

* Use the large spool cover for larger spool and use the small cover for smaller spool.

* If you use the small spool cover for a bigger spool, the upper tension may be unbalanced and, sometimes, the causes stitch skipping, breaking of thread etc.

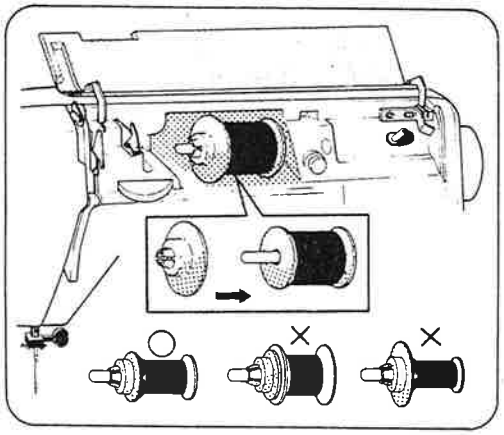

Thread, following numbers ①-⑦.

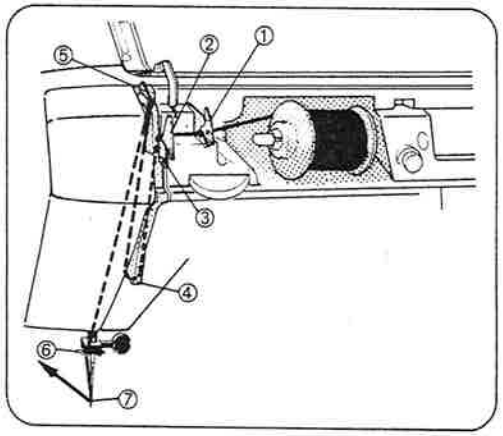

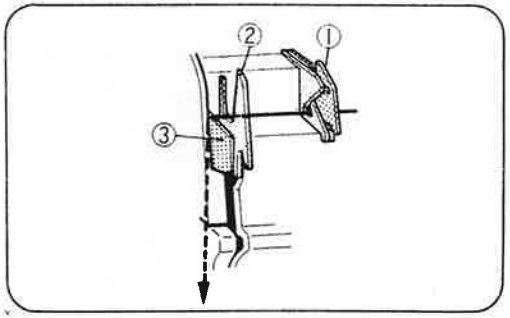

Pass the thread through guide ① then to ②.

Lead thread through either side of tension disc ③.

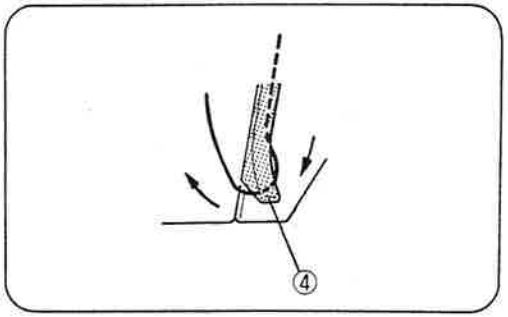

Hook it under lower guide ④ from right to left upwards.

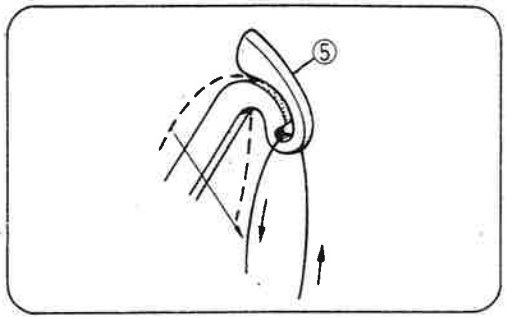

Thread take-up lever ⑤.

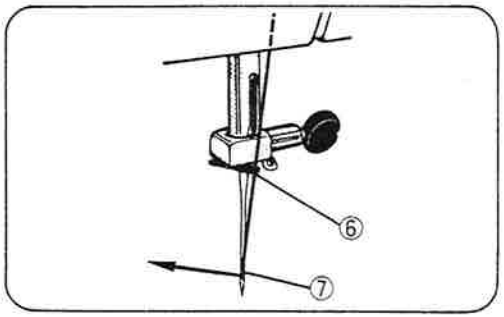

Pass thread around needle guide ⑥ (use left one) then through needle eye ⑦ from front to back.

Allow about 15cm (6") of thread extra.

DRAWING UP LOWER THREAD

Hold the end of the upper thread with the left hand as illustrated.

Turn the handwheel slowly towards you until the needle moves down and up again into its highest position.

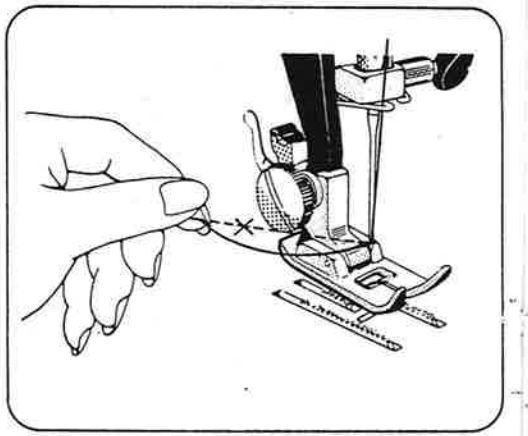

Pull the upper thread slowly and the lower thread will be brought up in a loop.

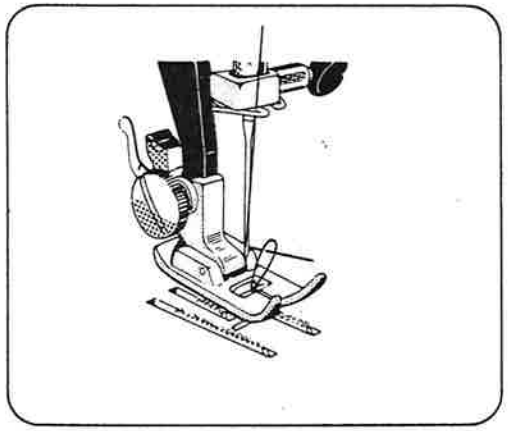

Pull out both threads to about 15 cm (6″) and place them together at the left under the presser foot.

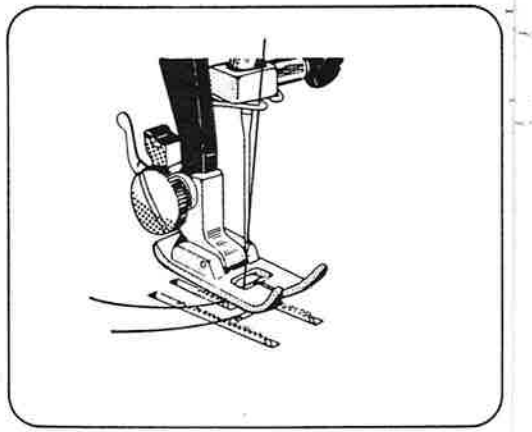

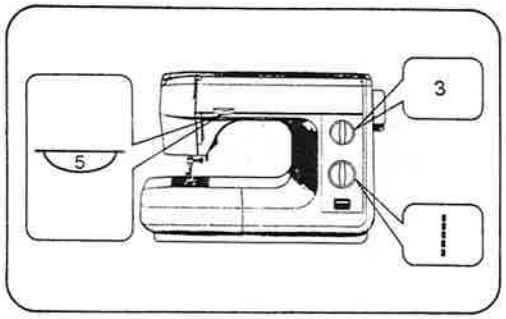

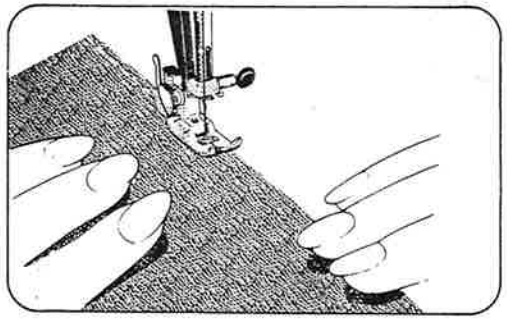

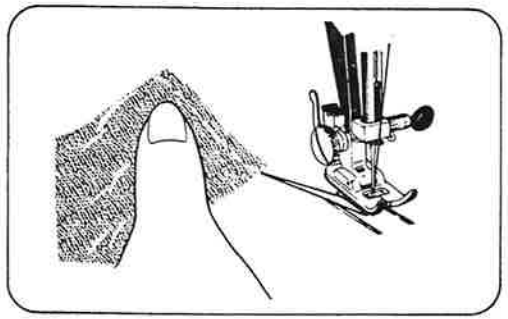

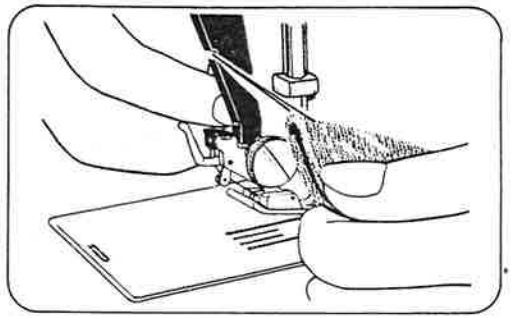

TRIAL SEWING

Now that, you have finished the first steps (page 1-7), you are familiar with the controls on your machine and with the accessories provided for the machine you are ready to start to sew with your new sewing machine.

–Let's try to sew straight stitch–

1. Make sure your machine is set completely as illustrated at the bottom figure of page 7.
2. Pattern selection dial to (┆).
3. Stitch length dial to 3.
4. Upper thread tension dial to 5.
5. Place fabric under the presser foot.

∗ Fabric should be placed under the presser foot with the bulk of the material to the left of the needle and the right edge of the material placed on the appropriate seam allowance.

6. Lower presser foot lifter.
7. Press foot controller lightly and commence forward sewing guiding the fabric by hand as it is fed. Never push or pull the material.

∗ The more you press foot the controller, the faster the machine runs.

8. Draw out fabric to left when sewing is finished.

∗ Always finish sewing each seam with the needle at its highest position.

∗ Leave at least 15cm (6″) of thread behind the needle so that it will not be drawn out of the eye of the needle when next sewing.

9. Cut threads with thread cutter behind the presser bar.

–Let's try reverse sewing.–

10. At first, sew forward.

    Then, push down reverse sewing lever to sew backwards.

    This is reverse sewing.

11. Release lever to return to sew forward.

* Reverse sewing is often done for reinforcement at the ends of seam (back stitching).

–Let's try zigzag sewing.–

12. Set pattern selection dial to (⧘).

13. Stitch length dial to 4.

14. Follow above step 4-8.

    This is zigzag sewing.

ADJUSTING THREAD TENSION

After you finish sewing the above stitches, check if upper and lower threads tension is equal and strong enough to lock both threads in centre as figure ⓐ .

If upper tension is too tight (loose), upper (lower) thread lies straight along upper (lower) surface of fabric ⓑ (ⓒ). Correct by turning tension dial in the direction of arrow.

* Always check the balance of upper and lower tensions by test sewing using fabric, needle, thread and stitch pattern you plan to use.
(Correct combinations are described on page 15.)

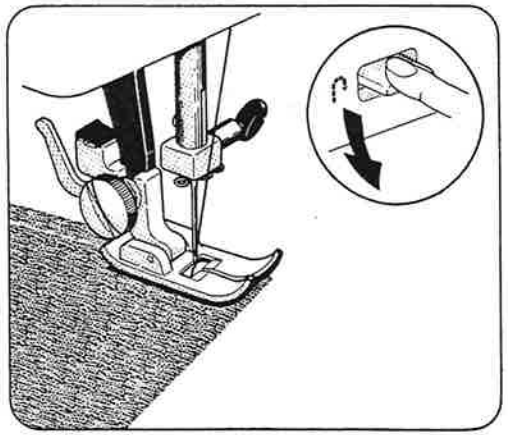

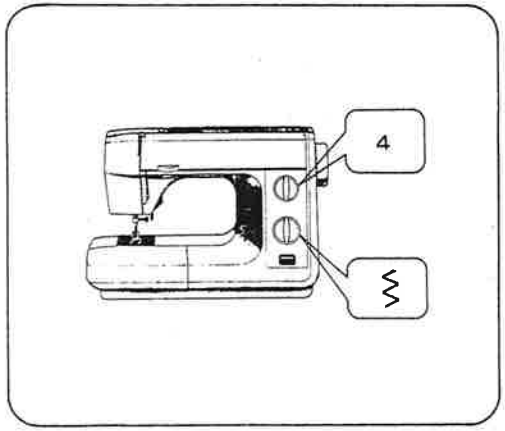

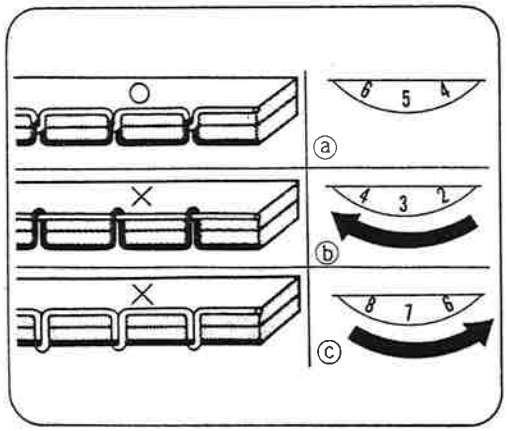

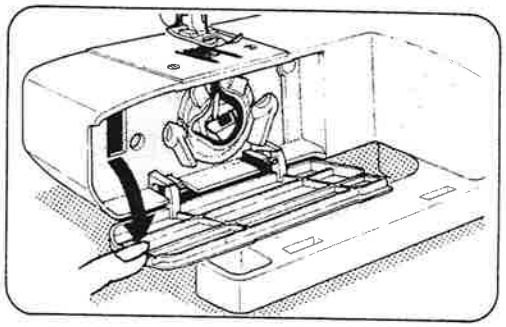

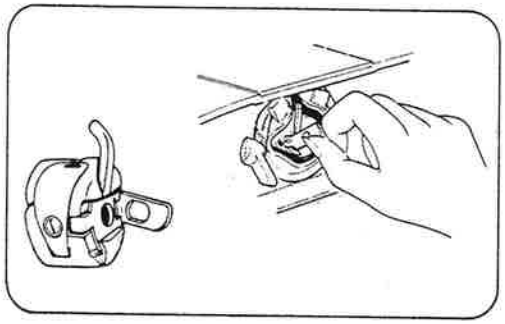

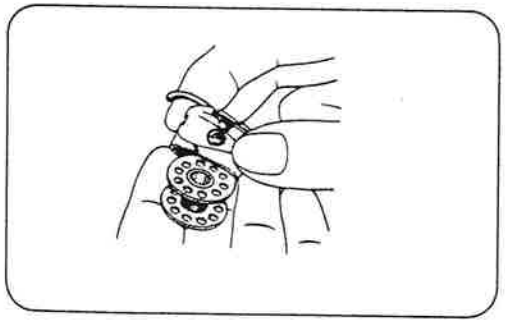

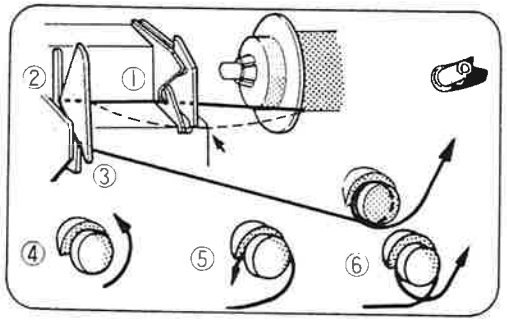

4. STARTING TO SEW

BOBBIN WINDING

Set the needle in the highest position by turning the handwheel towards you.

Open shuttle cover.

Open latch of bobbin case and pull it out.

Close latch of bobbin case and bobbin comes out easily.

Put a spool on spool pin. (See page 5). Draw thread from spool pin through thread guide and pre-tension device, following numbers ④, ⑤ and ⑥.

Wind thread clockwise around bobbin several times.
Push bobbin on to spindle.
Move the knob in the handwheel into the position.

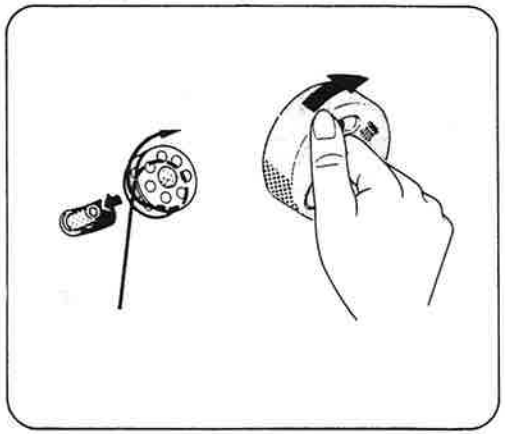

ⓐ Push bobbin to right and press down foot controller.

The bobbin stops winding automatically when it is full.

ⓑ Push bobbin to left, to disengage from wheel.

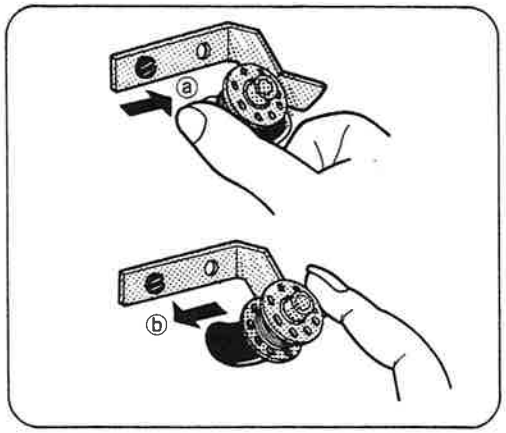

Take the bobbin off the spindle and cut the thread.

Move the declutch knob in the handwheel into the direction.

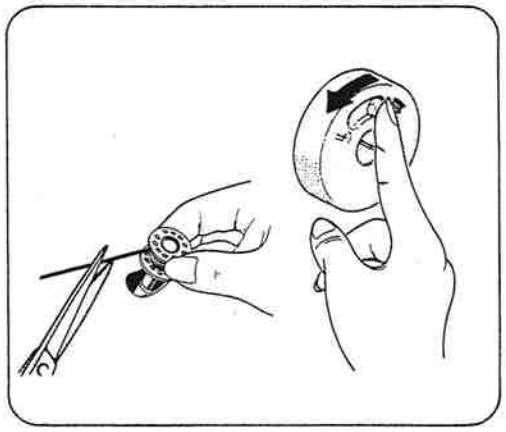

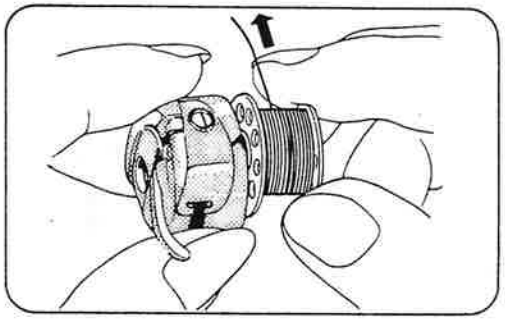

INSERTING BOBBIN

Place bobbin in its case with thread running in direction of arrow. (clockwise)

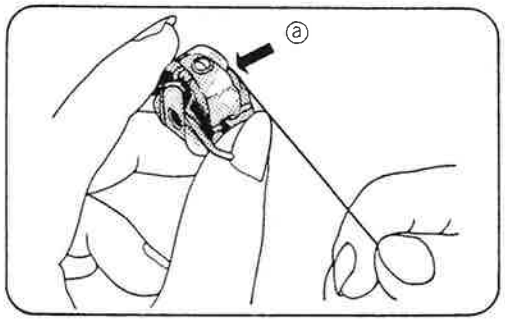

Guide thread into slot ⓐ of bobbin case.

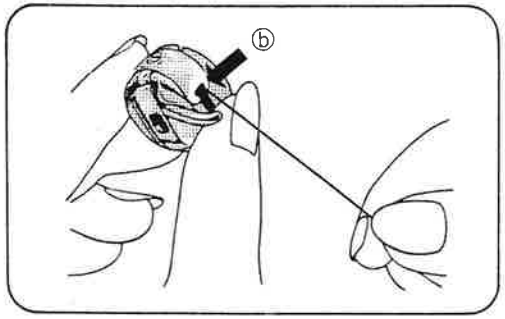

Pulling thread to left, bring it under tension spring then to delivery eye ⓑ .

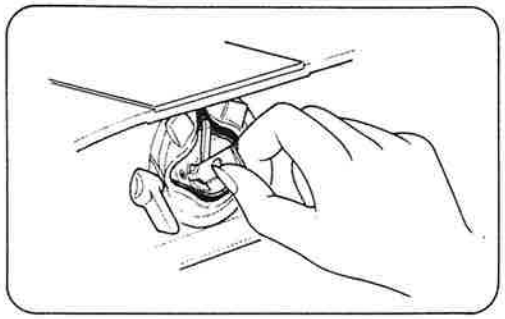

Raise the needle to the highest position.

Leave end of thread of about 10 cm (4″) from bobbin case.
Take hold of latch and push bobbin case into shuttle, as illustrated.
Release latch when bobbin case is fully inserted.
Note: only use TOYOTA type bobbins.

CHANGING FOOT

Raise presser foot lifter ①.

Set needle in the highest position by turning handwheel towards you ②.

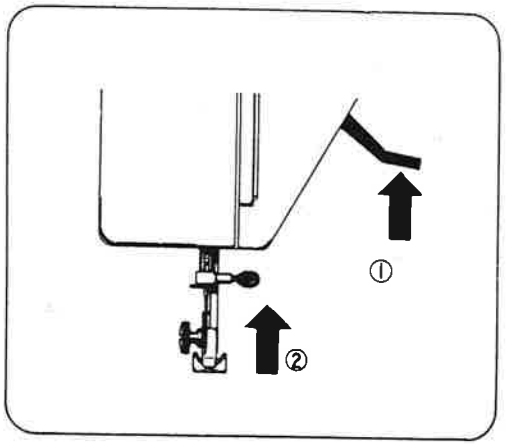

ⓐ Push button of holder towards you and foot will come off.

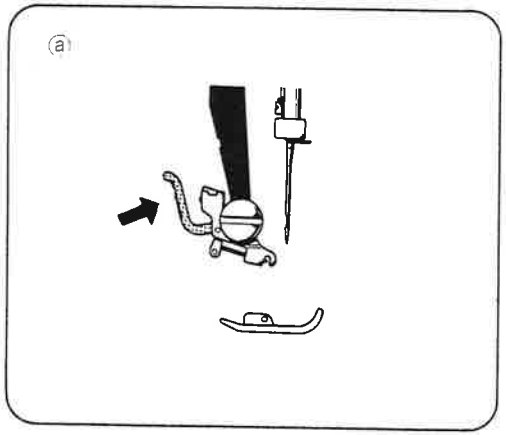

ⓑ Position a new foot by aligning holding groove of shank with pin of foot.

Lower presser foot lifter so that holder catches presser foot.

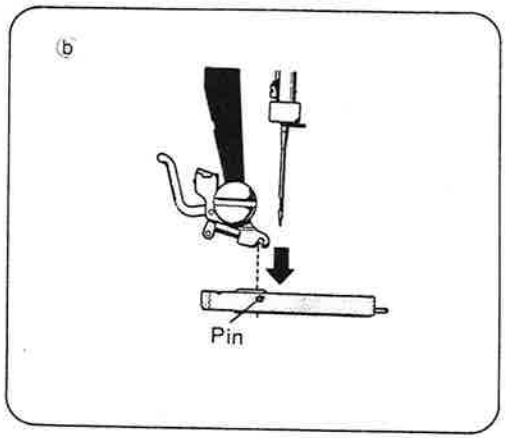

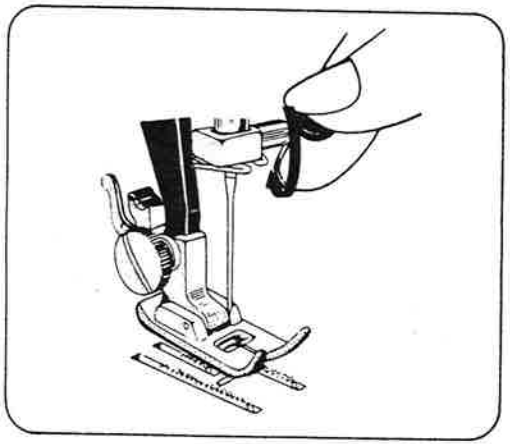

CHANGING NEEDLE

Set the needle in the highest position by turning the handwheel towards you.

Loosen needle clamp screw and take out needle.

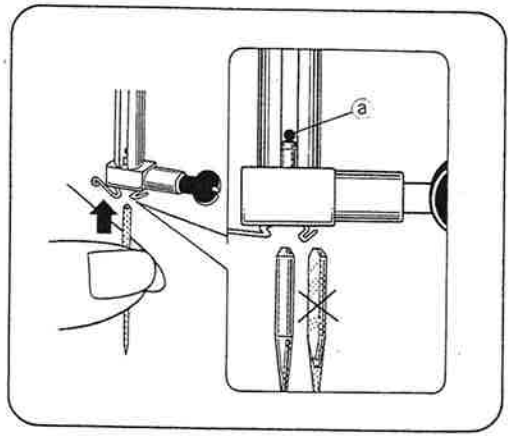

With the flat side away from you, insert a new needle into groove of needle bar.

Push needle into clamp until it reaches stopper ⓐ and tighten needle clamp screw firmly.

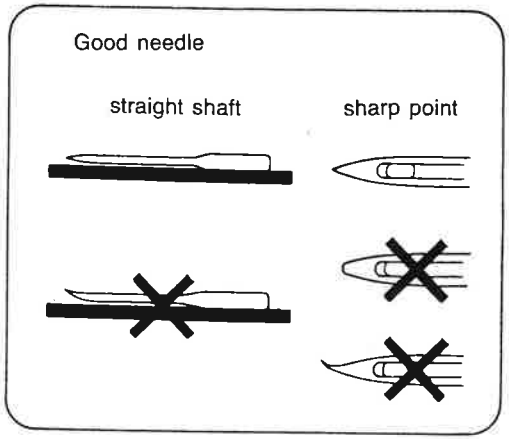

Always use a straight needle with a sharp point.

Using defective or worn needles not only causes stitch skipping, breakage of needles or snapping of thread; it also can damage shuttle and needle plate.
Note: Always use needle type 15×1/705.

FABRIC, THREAD AND NEEDLE TABLE

FABRIC	THREAD			NEEDLE			REMARKS
	European Cotton	Mercerized Cotton	Cotton Covered Polyester, Silk, Nylon	European 705	U.S.Size 15×1	Point Style	
VERY SHEER: Lace, Voile, Chiffon, Net	70	60	Silk Nylon	65-70	9	Regular	Loosen upper tension one or two points
SHEER: Blouse Crepe, Lawn, Organdy, Taffeta	50-70	60	Silk Nylon	65-70	9	"	
LIGHT-WEIGHT: Crepe, Wool, Brocada, Velvet	30	50	Silk	75-80	11	"	
MEDIUM: Wool, Silk, Linen, Velveteen, Cotton Faille, Terrycloth	30	50	Silk	80-90	11-14	"	
HEAVY: Denim, Duck, Sailcloth	30	Heavy Duty	C.C.Poly.	100	16	"	
EXTRA HEAVY; Upholstery, Canvas, Awning	30	Heavy Duty	C.C.Poly.	120	19	"	
[KNITS]							
LIGHT-WEIGHT: Tricot	50-70	60	Silk Nylon	70	9	Ball Point	
MEDIUM-WEIGHT; Jersey, Double Knit,	30	50	Silk Nylon C.C.Poly.	70-80	9-10	Ball Point	
HEAVY-WEIGHT; Double knit	30	50	Silk Nylon C.C.Poly.	80-90	11-14	Ball Point	
FAKE-FURS, VELOURS	30	Heavy Duty	C.C.Poly.	90-100	14-16	Ball Point	
[LEATHER]							
VINYLS FILMS	30	50	C.C.Poly.	90	14	Wedge	
LIGHT-TO-MEDIUM-WEIGHT	30	50	C.C.Poly.	90-100	14-16	Wedge	
HEAVY LEATHER	30	Heavy Duty	C.C.Poly.	100-110	16-18	Wedge	
[DECORATIVE TOUCHES]							
TOP STITCHING	Silk twist			100-110	16-18	Regular	
MACHINE EMBROIDERY	Size 50-70			65-80	9-11	Regular	

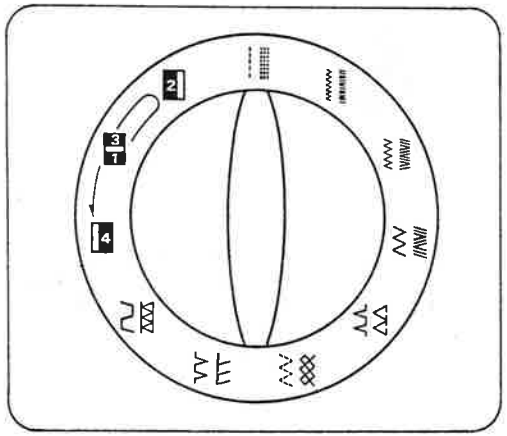

PATTERN SELECTION DIAL

The desired stitch will be obtained by turning the stitch selector, it can be turned either to the right or to the left.

The Stitches Are Shown As Below.

* Always make sure that the needle is in the highest position when operating the dial.

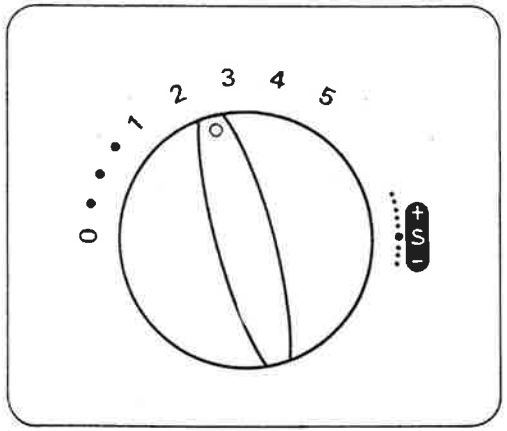

STITCH LENGTH DIAL

Set dial at indicating point according to stitch size required.

For a longer stitch, turn dial to right. For a shorter stitch, turn it to left.

For normal sewing it is set between 2 and 3.

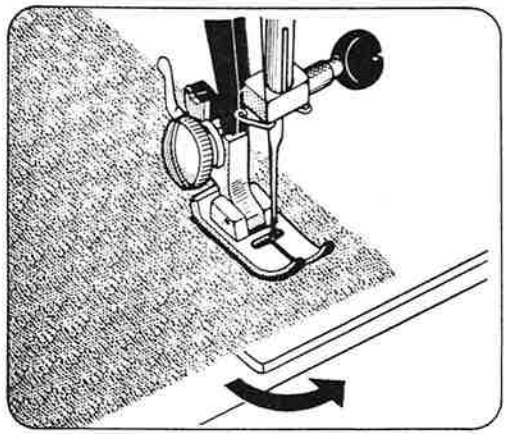

TURNING A SQUARE CORNER

To turn a square corner 5/8″ from the fabric edge, stop stitching with the needle tip piercing the fabric, when reaching the cornering guide as shown. Raise the presser foot, turn fabric. New stitching line will align with 5/8″ seam guide on side of needle plate. Lower the presser foot and begin stitching in new direction.

REVERSE SEWING

(Starting to sew)

Place fabric under foot about 1 cm (0.4") inside the edge.
Lower presser foot lifter.

(Reverse sewing)

To reinforce seam, sew backwards to the edge of fabric by pushing reverse sewing button.

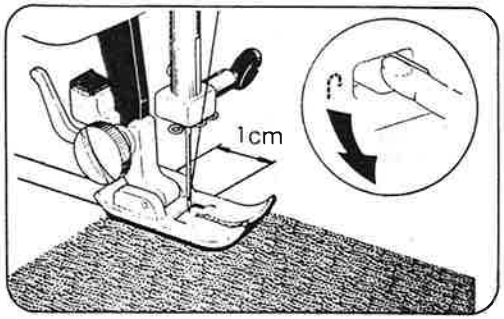

Release button and commence forward sewing guiding fabric by hand as it is fed.
Never pull material.

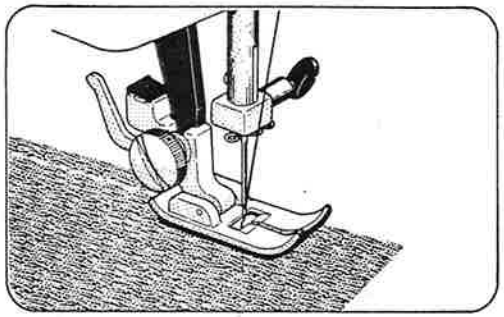

Sew reverse stitches for reinforcement at end of seam.

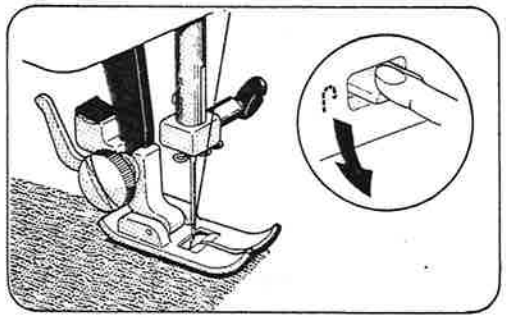

Draw fabric to left when sewing is finished.

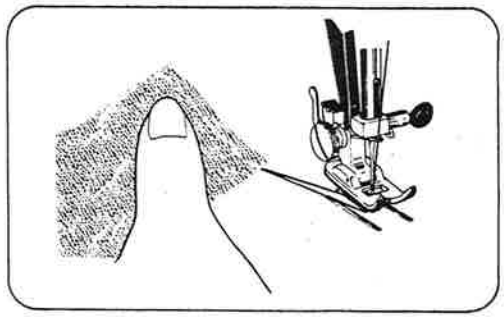

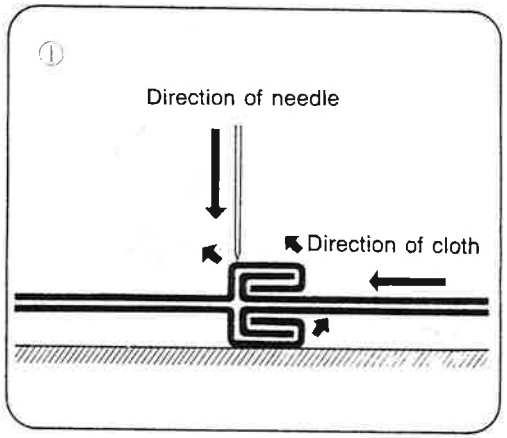

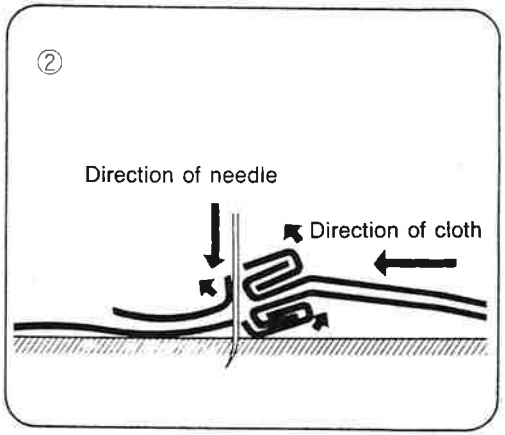

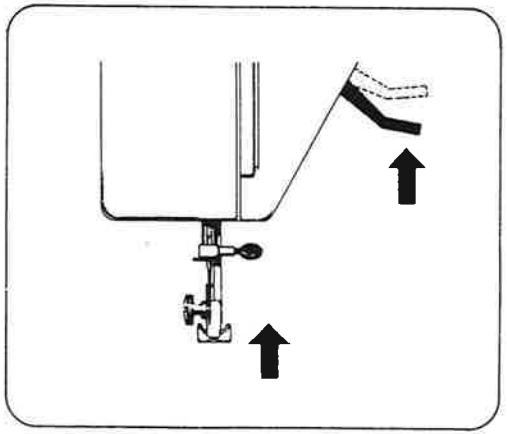

THICK FABRIC SEWING

(Particularly denim)

For thick fabric sewing, it is important to follow the instructions carefully.

Make sure that the sewing is set flat. Needle must be perpendicular to the seam so that it penetrates the cloth properly.

Improper setting causes deflection and possible breaking of the needle. For sewing of very thick cloth, sew gently, maintaining the cloth perfectly by hand.
Breaking a needle is not a mechanical problem, but simply misuse.

DOUBLE PRESSER FOOT LIFTER

In order to obtain a larger opening when using very thick materials, firmly push presser foot lifter up as far as it will go.

5. SELECTING THE STITCH

The desired stitch will be obtained by turning the Pattern Selection Dial.

* When operating the selector, make sure the needle is in the highest position.

STRAIGHT SEWING

Set machine as shown.

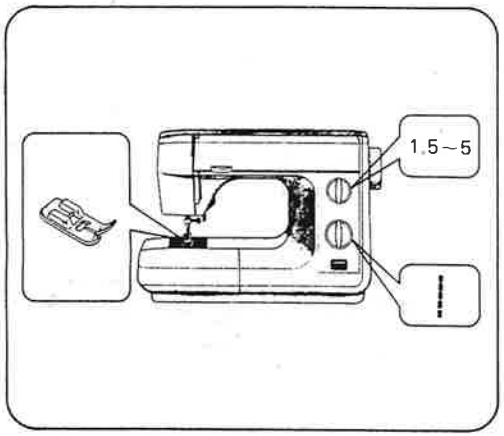

ZIGZAG SEWING

Set machine as shown.
To prevent seam ends unravelling, set machine for straight stitch and sew in reverse at beginning and ending of seam.

3 kinds of zigzag patterns can be selected as shown.

Stitch Selector	Zigzag Width
	2mm
	3mm
	5mm

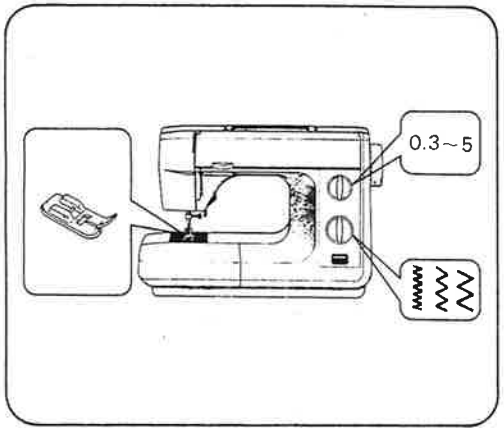

THREAD TENSION FOR ZIG-ZAG STITCH

Better-looking zigzag stitching requires less upper tension than straight stitching.

Loosen upper tension slightly.

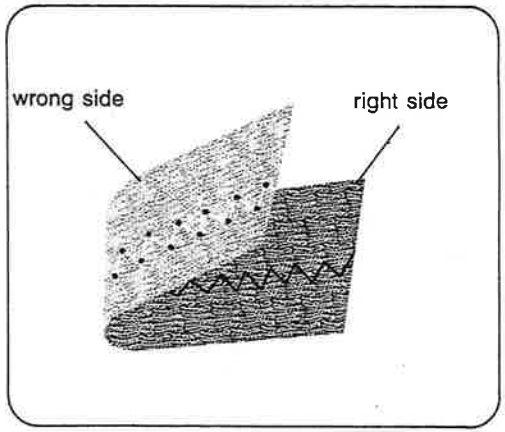

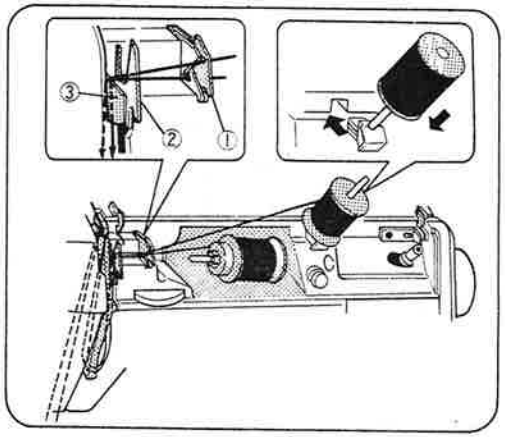

TWIN NEEDLE THREADING

*** Twin needle is an optional**

Extra spool pin is packed in accessory tray.

Insert the extra spool pin into the hole and put on it another spool.

Thread in the same way as normal threading, except at points ③, ⑥ and ⑦.
At point ③, pass threads separately to right and left of tension disc.

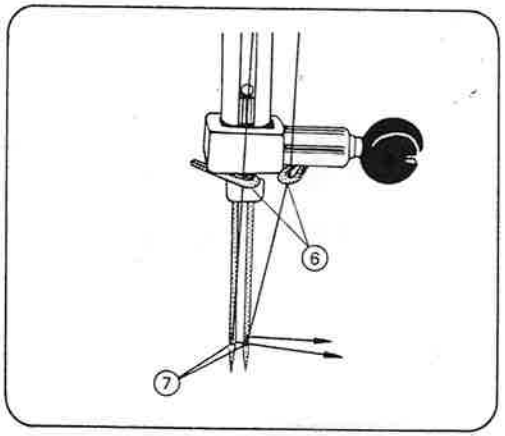

At guide ⑥, pass one of the threads to the right guide and the other to the left guide.
At point ⑦, thread from right guide should be led to the right needle eye, and from left guide to the left needle eye.

Allow about 15cm (6") of thread extra.

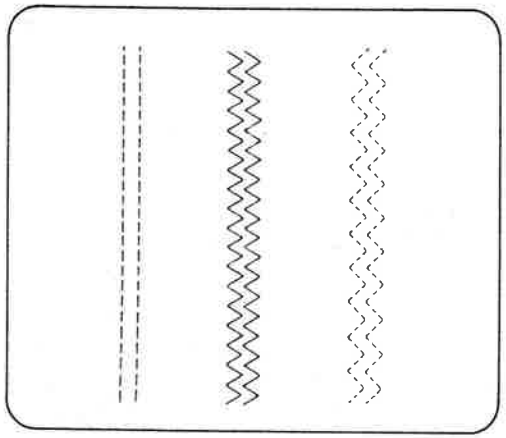

Decorative Tucks or Designs

Any stitch can be used with the twin needle for decorative effects. Most attractive are the multiple stitch zigzag and blind hem stitch for fancy tucks. The satin stitch or tapered zigzag designs in two colours are effective for creative trims.
CAUTION: Remember to use no more than 2.5 zigzag width.

PIN TUCKING

*** Option accessory**

Set machine as shown.

For better appearance, use sheer material and tighten lower thread a little.

For twin needle threading see p.20.

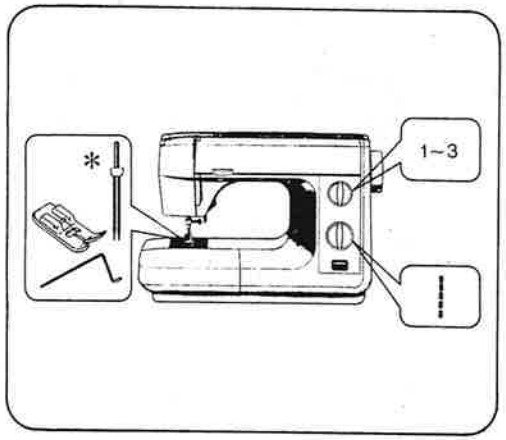

Insert the quilting guide under the spring plate on the holder.

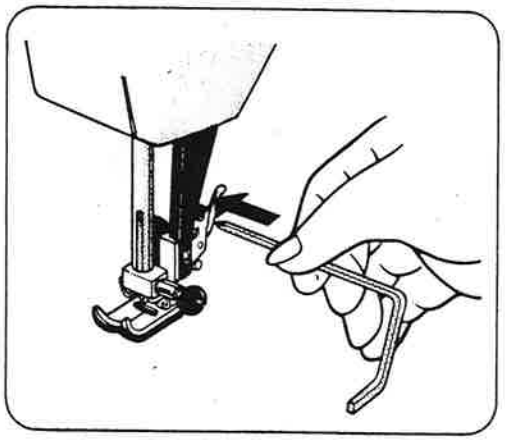

Mark the first line with a pencil or railor's chalk, and sew.
For the second line, just sew following the stitching of the first line using the guide.
The intervals between the lines of stitching can be adjusted by moving the guide in the direction of the arrow.

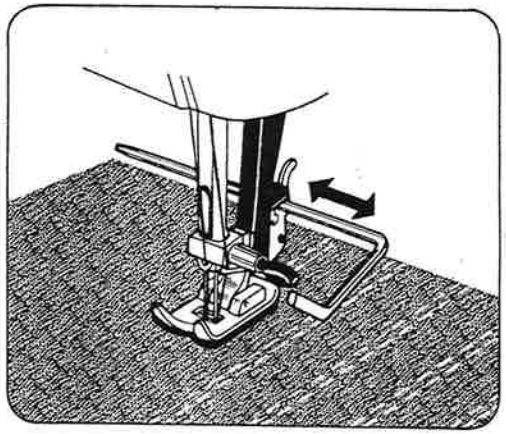

BLIND HEM STITCH

Set machine as shown.

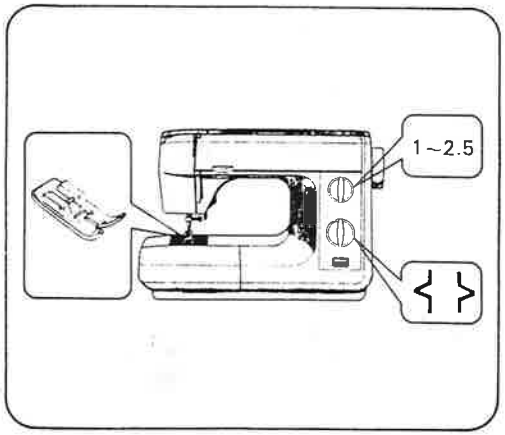

Fold material as shown and place it under foot.

For a neater finish, it is preferable to baste or iron hem beforehand.

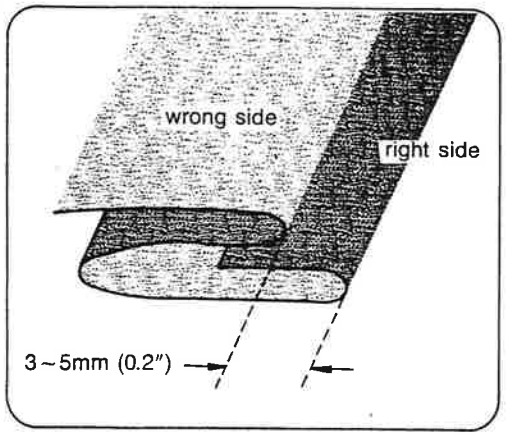

Sew carefully, so that straight stitches are made on hem edge, and slanting stitches pierce only one or two threads of fold.

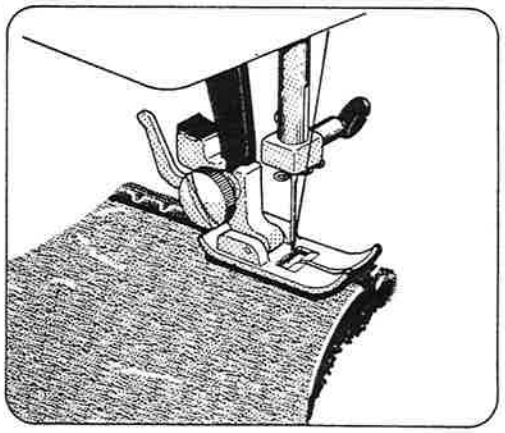

ⓐ Correct seam.
ⓑ Needle is catching edge of fold too much.
ⓒ Needle is not catching edge of fold at all.

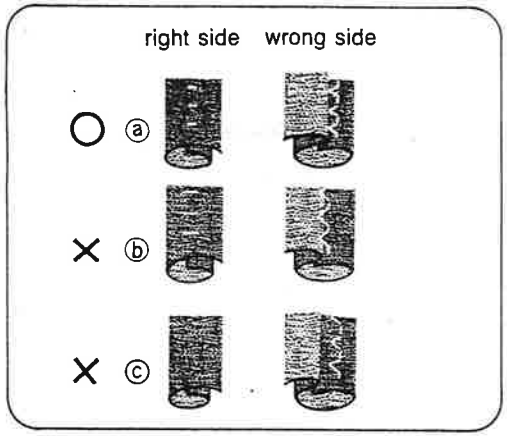

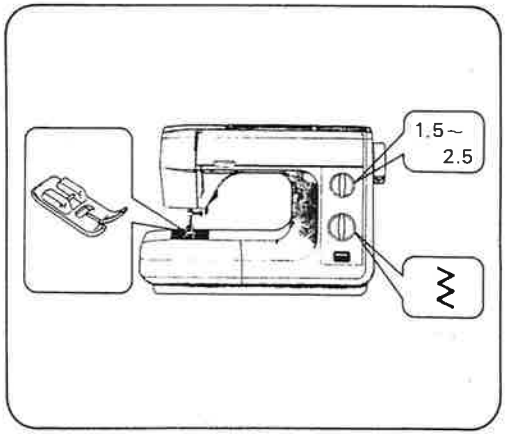

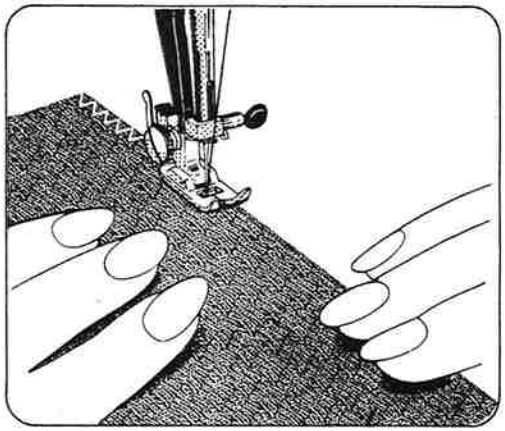

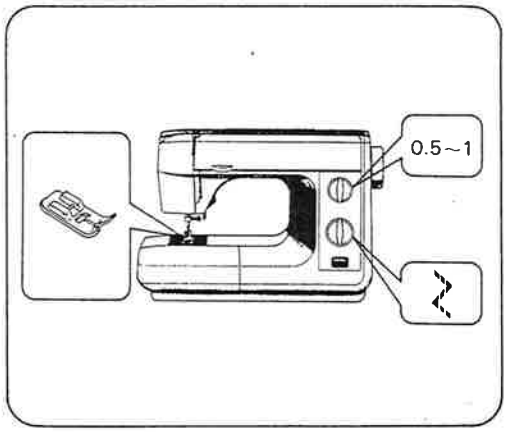

OVERCASTING

For light weight material:
Set machine as shown.
Overcasting prevents edge of fabric from fraying and produces neat finish.

Place the seam allowance under the presser foot with the edge of the seam in line with the side of the presser foot as illustrated.
Trim the fabric to the stitch line.

For thick and elastic, and also very fine material:
Set machine as shown.
Sew in the same way as above.

OVERLOCKING

Overlocking stitches make it possible to sew and overcast seams at the same time.

Set machine as shown.

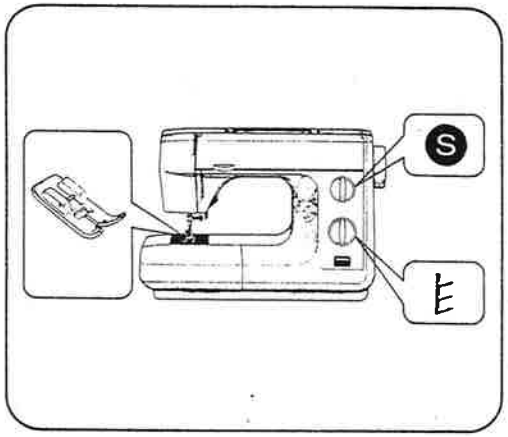

Put two pieces of cloth together with right sides facing and sew.

To prevent edges from fraying, sew so that right side stitches drop outside the edge of material.

In some case overlocking stitches can be used for overcasting.

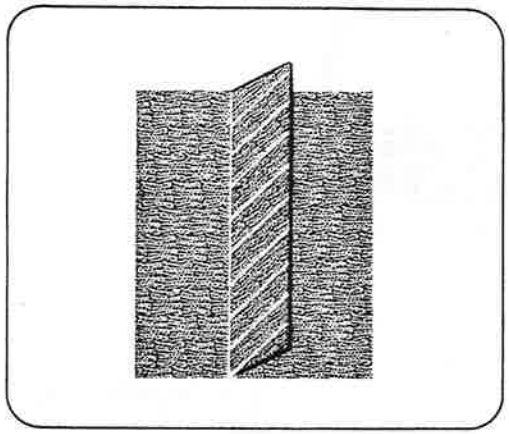

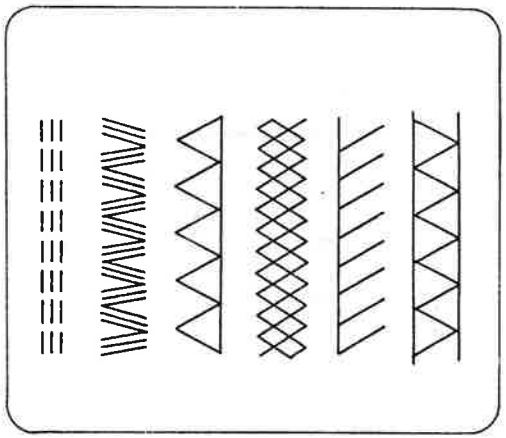

STRETCH STITCHING

The stitches shown are all used with stretch and knit fabrics. These are special utility stitches built in the machine for your quick selection.

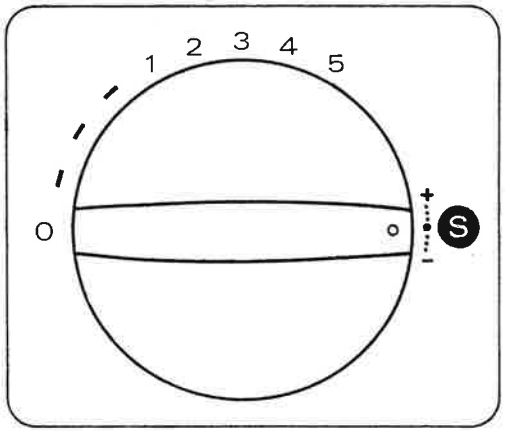

Adjusting Stretch Stitch Balance

In stretch stitch sewing, the stretch stitch adjuster should usually be in a neutral position (between "+" and "–").
When sewing some fabrics, you may need to adjust this control to balance the stitches for appearance sake.

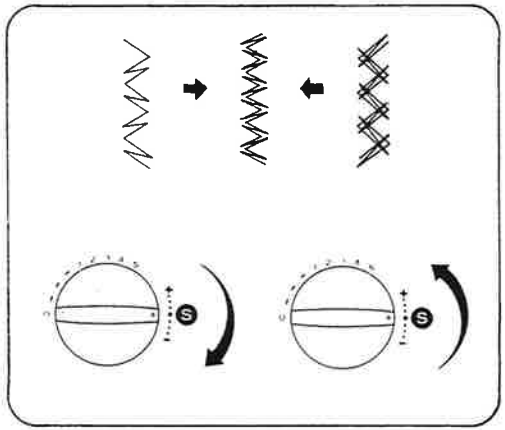

If the design seems open like the illustrations to the left, adjust the control slightly toward "–" until design looks like the centre design.

If the design appears to be closed as in the right hand illustrations, turn the control toward "+" until stitching is as you desire.

MAKING BUTTONHOLES

Set machine as shown.

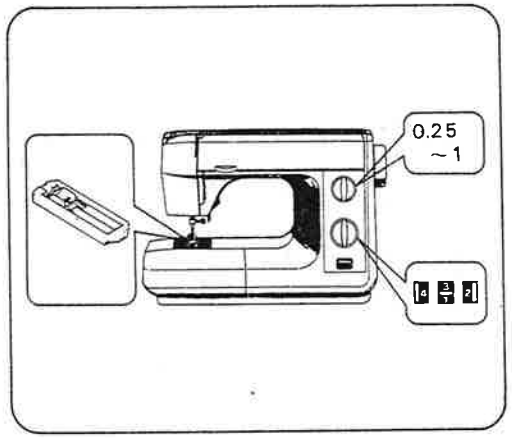

Determine Length

Measure the diameter and thickness of the button and add 0.3cm (1/8") for bar tacks.
Mark buttonhole size on material.

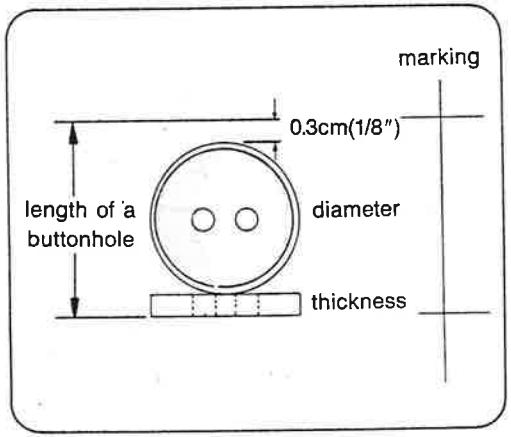

Attach buttonhole foot.
Completely push back sliding part ⓐ of buttonhole foot.
Place material under foot so that marking of buttonhole passes through centre of foot. Directions line ⓑ of foot indicates beginning line of marking.

Extra thread is placed under foot and then to left or back.

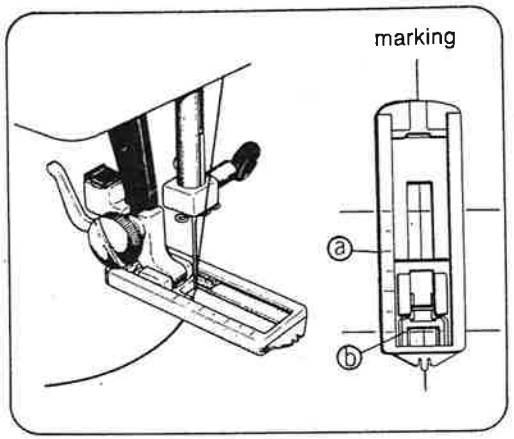

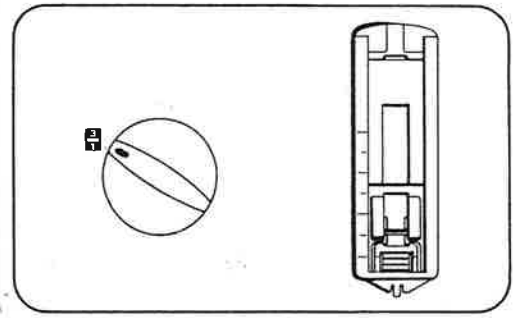

Bar tacking: Set pattern selection dial to 1 (▬) and sew 5-6 stitches.

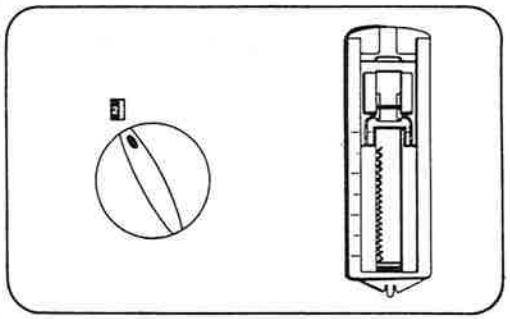

Left side: Change pattern to 2 (▮). Sew left side from front to back until it reaches the end line.

Note at which line the centre marker points so that it is not necessary to mark the end lines for all buttonholes.

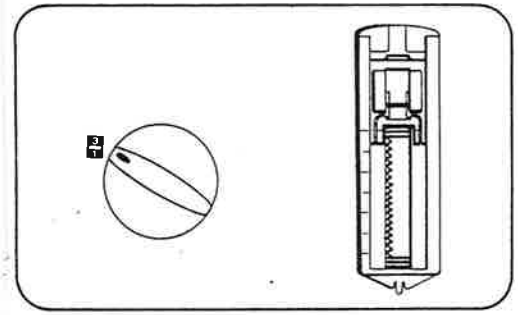

Bar tacking: Change pattern to 3 (▬) and sew 5-6 stitches.

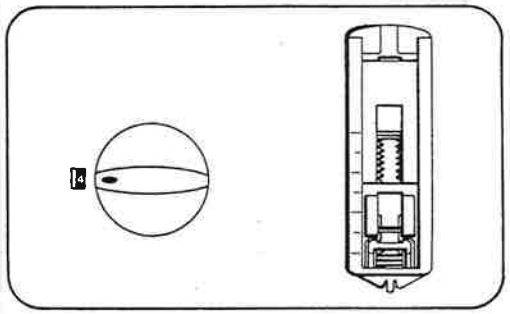

Right side: Change pattern to 4 (▮) and sew right side until it catches first bar tack.

Cutting Buttonholes

Place a pin through the bar tacks to prevent over-cutting.

Cut the buttonhole along centre with the buttonhole cutter.

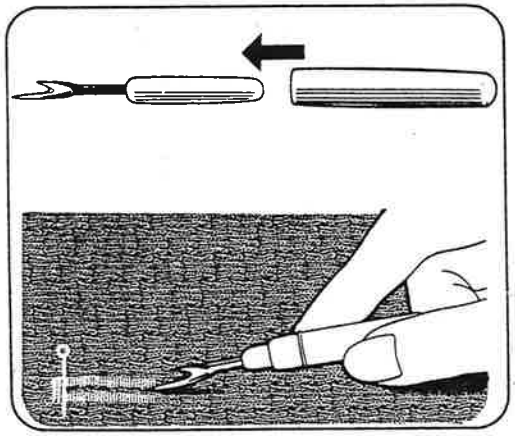

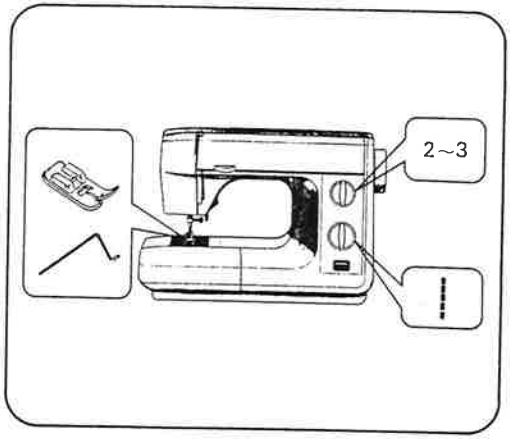

QUILTING

Set machine as shown.

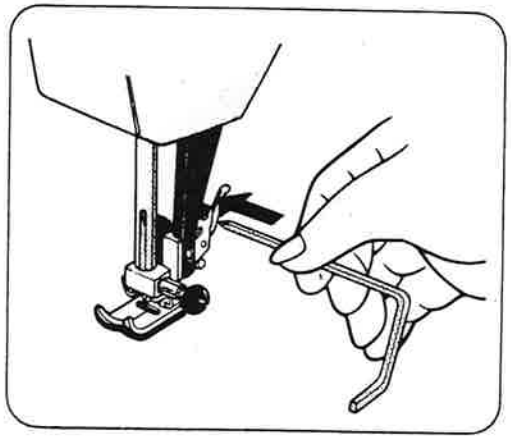

Insert the quilting guide under the spring plate on the holder.

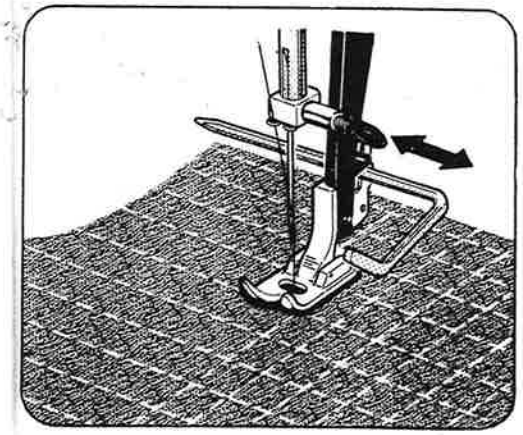

Baste layers of material to prevent them from slipping out as you sew.

Attach quilting guide and sew in the same way as pin tucking.

ZIPPER SEWING

Set machine as shown.

By using a special zipper foot, zipper sewing can be easily done without turning the fabric.

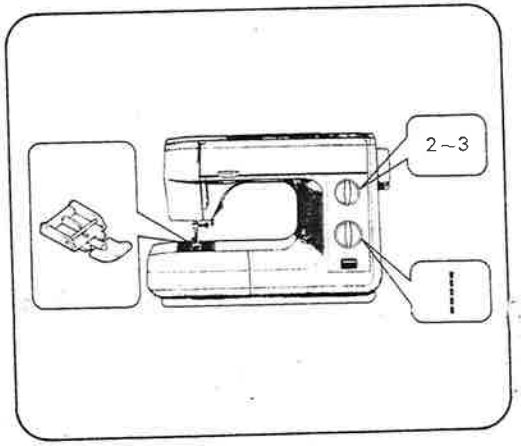

Set zipper foot on the right of the needle.

Sew right side of zipper guiding fabric carefully so that right side teeth of zipper are parallel with left edge of foot.

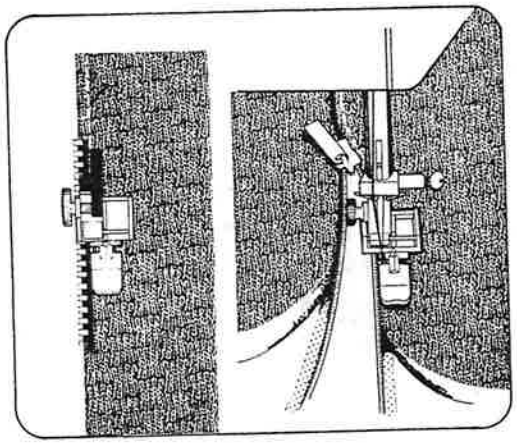

Re-set zipper foot to the left of the needle.
Sew left side of zipper in the same way.

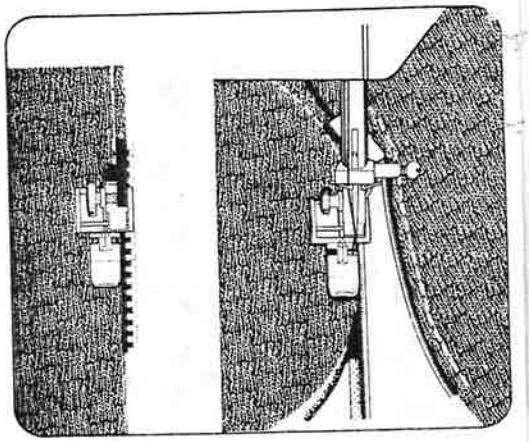

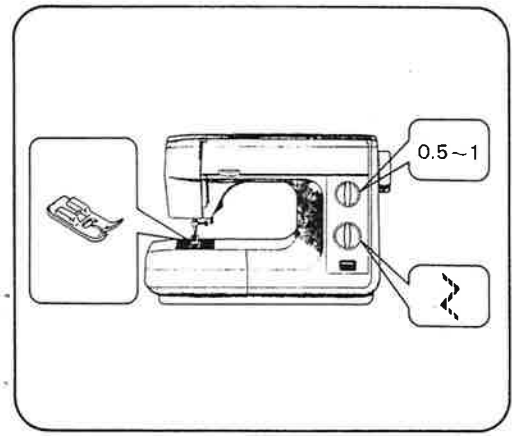

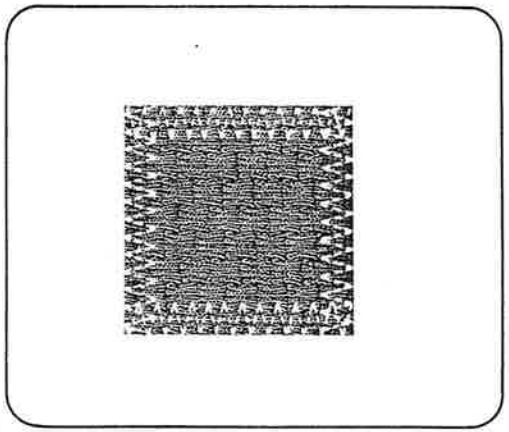

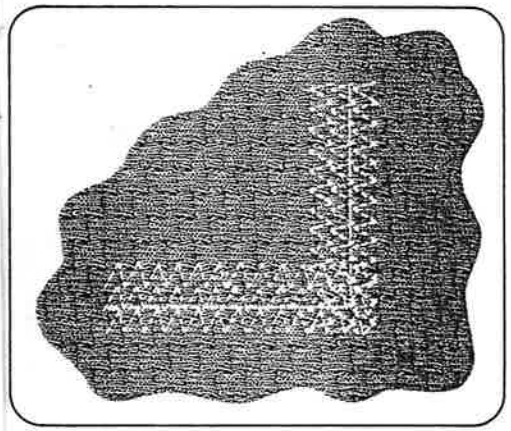

MENDING

Patching

Set machine as shown.

Place the patch over the worn part. Pull thread ends toward back or left when starting sewing. Sew along the edge of the patch on the right side. Trim away the worn part close to the seam on the wrong side.

Mending a Rip

Set machine in the same way as for patching.

Sew the edges of tear together first. Then sew two more seams on either side.

A piece of gauze can be placed underneath to reinforce the rip.

SMOCKING

Set machine as shown.

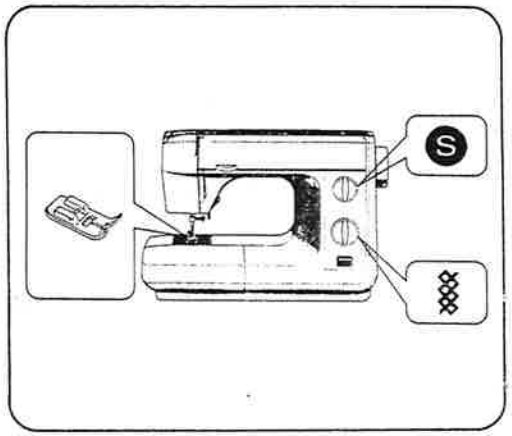

To gather the fabric, sew two straight lines with stitch length 5 and very loose upper tension. Make knots in one end.

Gather fabric toward knots while holding the other end of lower threads with fingers.

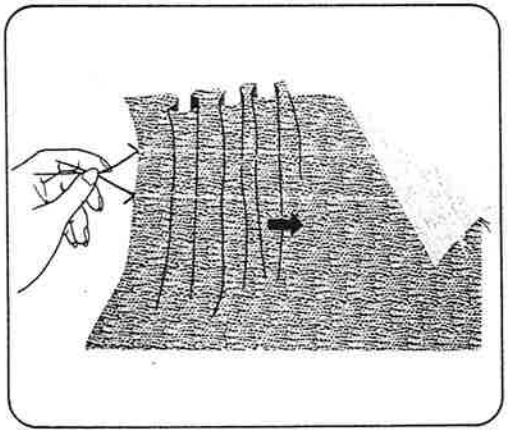

Sew smocking stitches on gathered part between two straight lines of stitches.

Take out the threads of the straight stitching after you finish sewing.

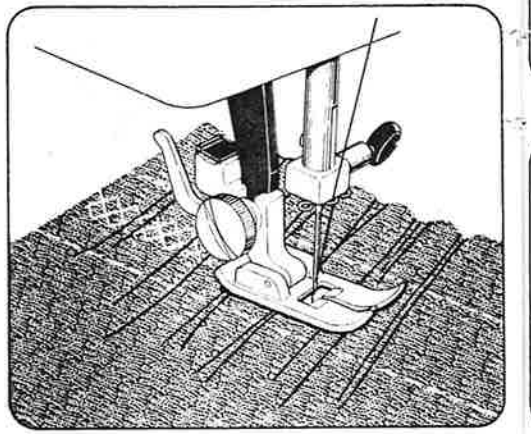

APPLIQUE WORK

Set machine as shown.

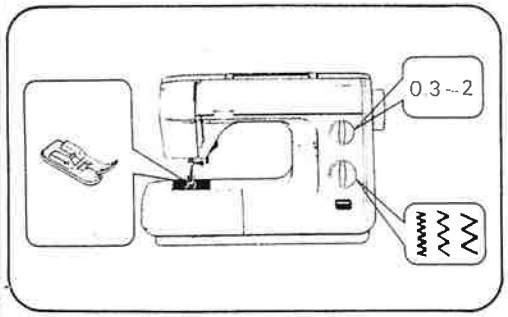

Draw design on material to be used as an applique and cut it out. Place cut-out on base material and baste it.

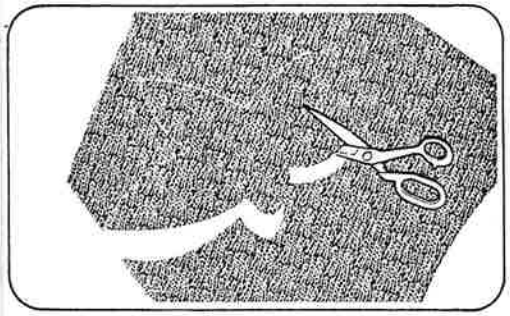

Sew around the outline with zigzag stitch adjusting stitch length and width according to shape and size of cut-out and type of base material.

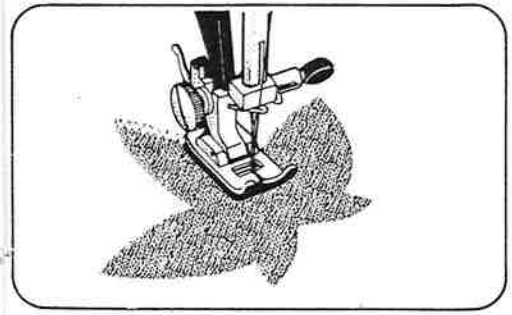

To change direction at corners, or to sew very small circles, stop machine, positioning needle just away from edge of cut-out, lift presser foot and turn material. Lower presser foot and continue sewing.

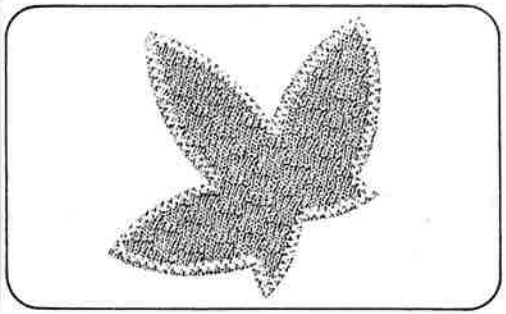

EMBROIDERY

Set machine as shown.

Remove foot, and holder screw.

To avoid lower thread being pulled up, reduce upper thread tension.

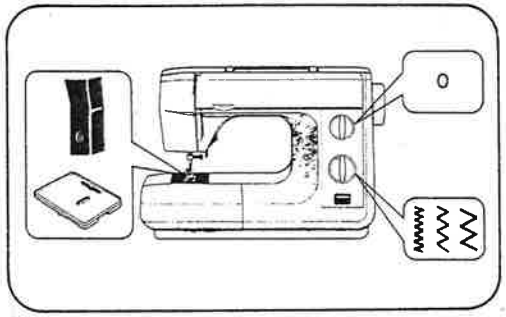

For good embroidery, it is important to use correct needles and thread.
Use thin embroidery silk for upper thread and a thinner silk of same kind and color for lower thread.
Trace your design on material and centre it in embroidery hoop. Made sure material is taut.

Needle	Thread
No. 9	120 ~ 100
No. 11	100 ~ 80
No. 14	60 ~ 50

Pull out lower thread by turning handwheel towards you while holding upper thread lightly.

Lower presser foot lifter.

Grasp lower thread then make two or three stitches, snip off excess threads.

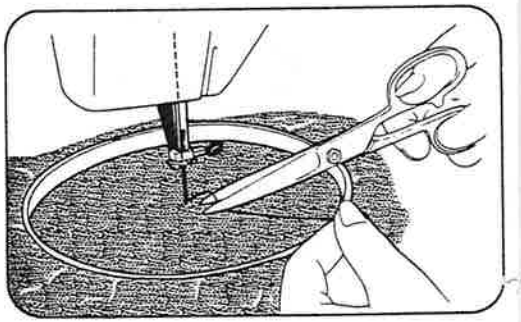

Start sewing along outline of design with satin stitch.
Continue sewing with guiding hoop by hand.
To finish filling, sew several straight stitches.

Lay typewriting paper underneath when embroidering sheer fabric.

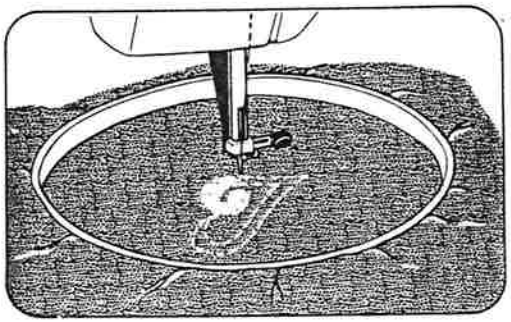

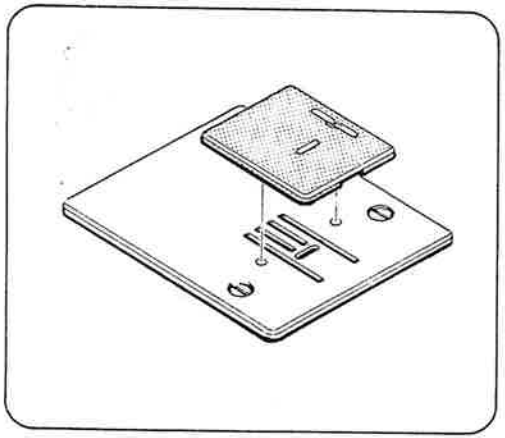

Darning Plate

There are a few times when you want to control the feeding of the fabric yourself. Raise needle to its highest position and raise presser foot. Place darning plate over needle plate aligning two pins of darning plate with holes of needle plate.
You may then determine the movement of the fabric yourself.

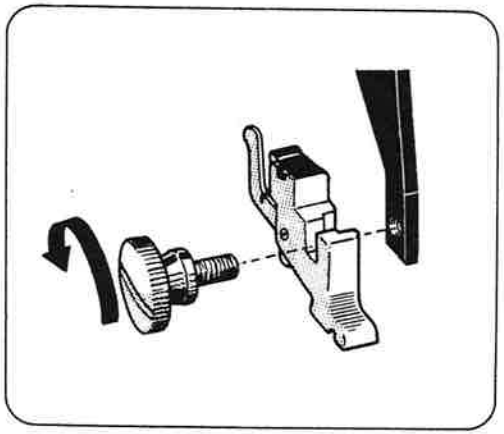

Removing Foot Holder

Remove foot holder by loosening screw with screwdriver.

6. MAINTENANCE

Your machine requires regular cleaning and oiling for satisfactory sewing performance. A machine which is used for a few hours a day needs to be cleaned and oiled once a month.
Important:
Disconnect power supply before carrying out for maintenance on machine.

CLEANING

Remove foot and needle.
Remove needle plate.

Brush off all dust and lint on feed dog with a cleaning brush.

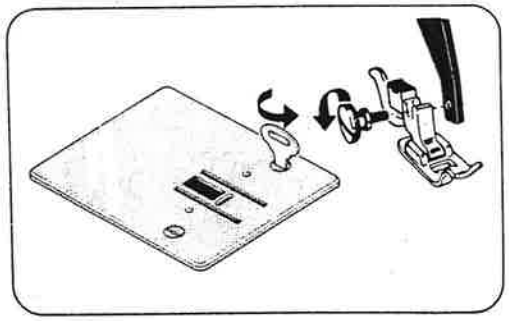

Turn latches outwards.

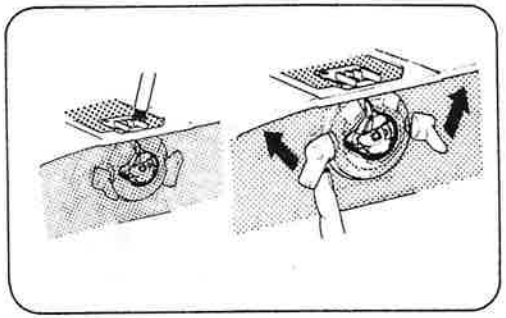

Remove shuttle race cover.
Remove shuttle. Clean shuttle race with a cleaning brush and a soft cloth.

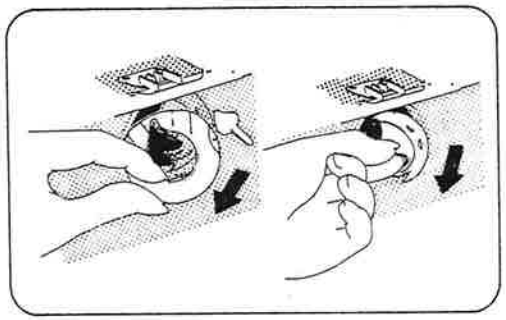

OILING

Use oil manufactured specially for sewing machine use. Other oils will eventually cause mechanism to jam.

Apply one drop of oil to part of shuttle where friction occurs.

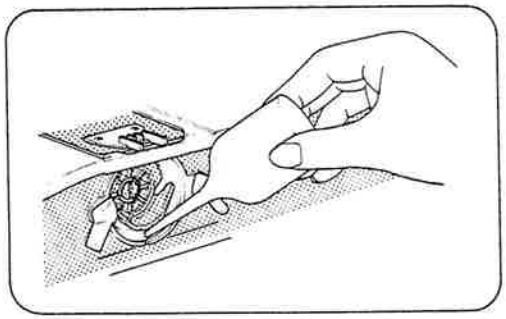

7. TROUBLE CHART

PROBLEM	PROBABLE CAUSE	CORRECTION
Breaking lower thread	Thread not wound evenly on the bobbin or not drawn up correctly	P.12, P.7
	Lower thread tension too tight	P.40, P.41
	Lint stuck in the bobbin case and inside the tension spring	Remove lint and fluff with a cleaning brush
Skipping stitches	Needle not fully inserted	P.14
	Needle bent	P.14
	Size or type of needle and thread not suitable for the material	P.15
	Incorrect upper threading	P.5, 6
	Too much oil on the shuttle	P.37
Irregular stitches	Incorrect size of needle for the material	P.15
	Upper thread tension too loose	P.9
	Incorrect lower tension	P.40
The material not fed correctly	Pattern selection dial not set correctly	P.16
	Lint stuck on the feed dog	P.37
Noisy machine	Check for thread in race, the slightest amount of thread in race may cause noise or binding, use material like tooth pick or cotton swab to clean.	P.37

PROBLEM	PROBABLE CAUSE	CORRECTION
The material puckers	Upper or lower thread tension too tight	P.40, P.41, P.9
	Stitch too long for material	P.16
	Thread too thick	P.15
	Incorrect threading of upper or lower thread	P.5, P.6, P.12
Breaking needle	Needle not correctly inserted	P.14
	Needle bent	P.14
	Needle clamp screw too loose	P.14
	Upper thread tension too tight	P.9
	Needle too fine for the material	P.15
	Dials have been changed while the needle was down in the material	P.16, P.26
	Zigzag width set more than 2.5 while twin needle was attached	P.20

* If trouble is still apparent in the machine, please consult your nearest dealer. Do not try to correct fault by yourself.

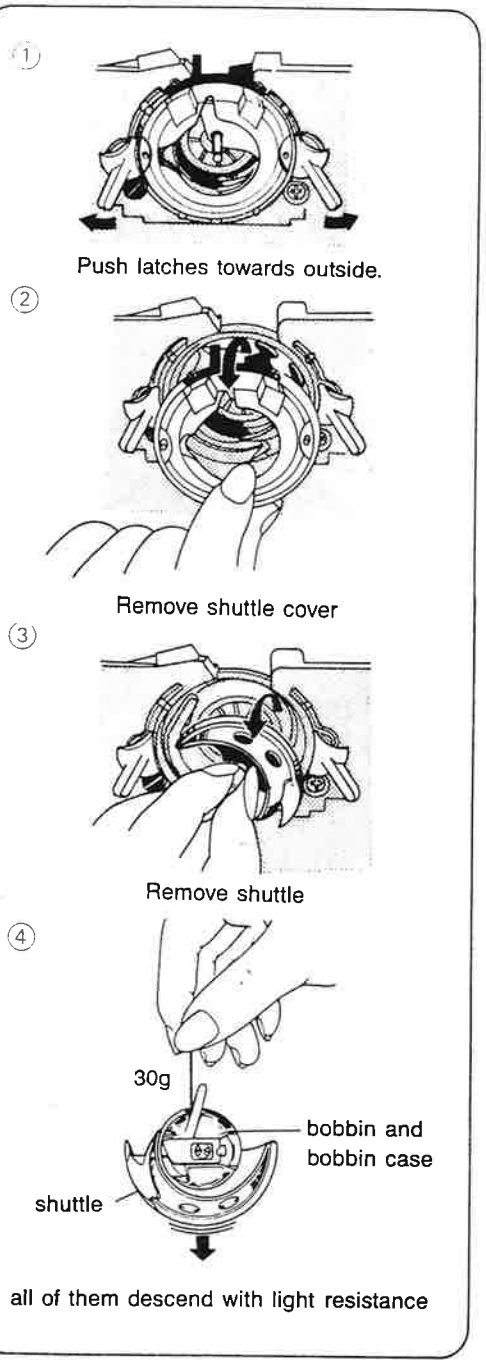

LOWER TENSION ADJUSTMENT

If your machine skips or loops stitches, it is not out of order.
To check bobbin thread tension, suspend bobbin, bobbin case and shuttle all together by thread as illustrated.
Move up and down vertically (like yo yo) always use correct bobbin.
Then it is easy to adjust upper tension on the numbers 4, 5, 6.

For tension adjustment, turn screw using small screwdriver.

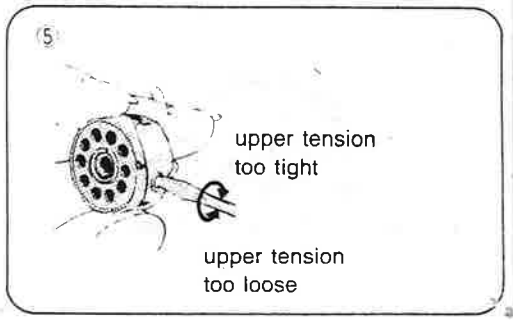

attach shuttle.

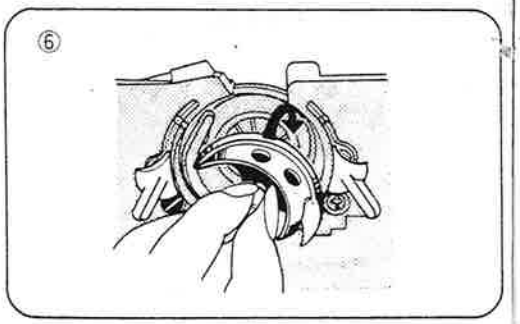

attach shuttle cover.

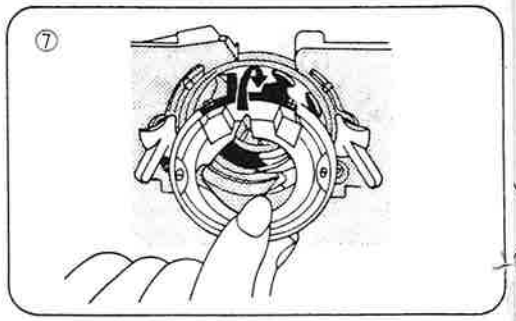

push latches towards inside.

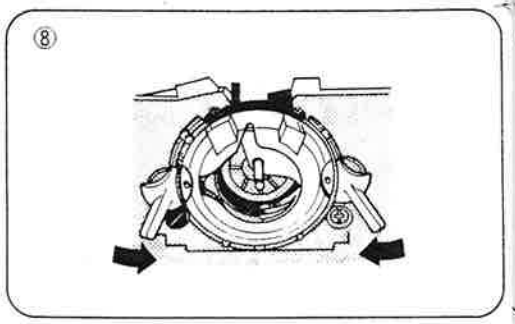

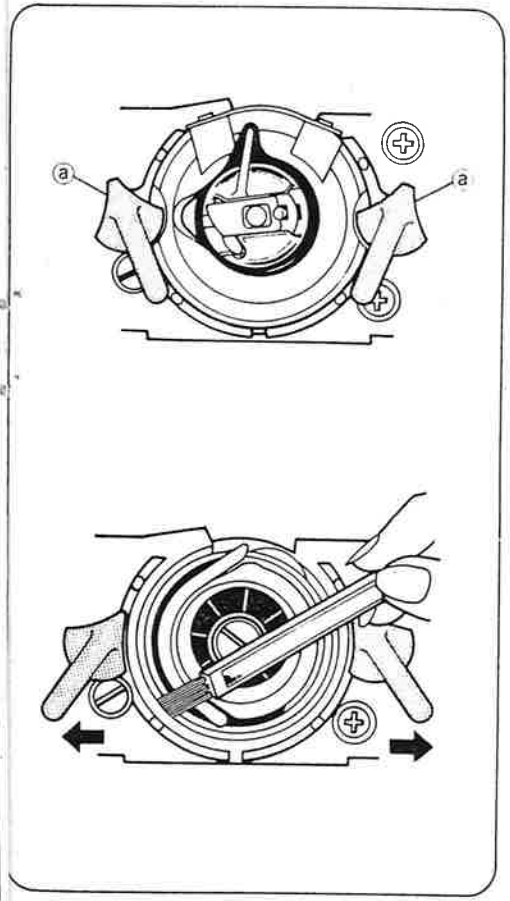

CLEANING SHUTTLE CASE

Thread stuck between shuttle and shuttle case causes sudden rapid running or sudden stopping of the machine.

In this case you should proceed as follows:

① Lift presser foot and remove bobbin case.

② Push latches ⓐ towards outside and remove shuttle cover and shuttle with fingers.

③ Clean shuttle and shuttle case and re-assemble them.

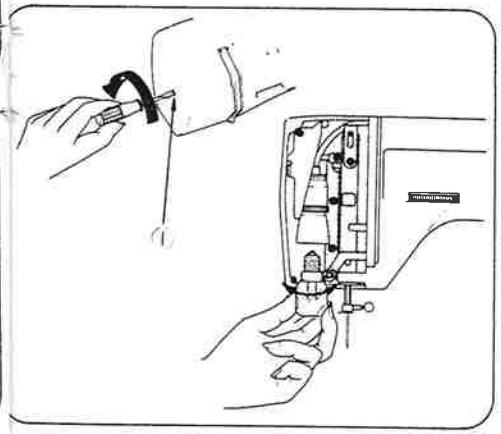

CHANGING LIGHT BULB

Unplug the machine.
Loosen the screw ① as shown and open face cover as shown.

Remove the bulb by unscrewing it in a counterclockwise direction. Install a new bulb by screwing it in clockwise.

A STITCH AHEAD OF THE TIMES

TOYOTA

sewing machines

"TOYOTA" FASHIONS YOUR FUTURE.

AISIN SEIKI CO., LTD.

Kariya City 448, Japan

1331019-111-B

Printed in Taiwan